Report on Working principle of the Natural Gas based solid oxide fuel cell

Location: M/s Intel Technologies, Bangalore

Plant Details: 4MW(250kW x16nos.) patented technology by Bloom Energy.

The below photograph is a combination of 6 Fuel cell servers Located at Intel campus. Each server capacity is 250 kW.

SOLID OXIDE FUEL CELL: HOW IT WORKS

Natural Gas or Biogas (CH_4 – Methane)

Fuel Passes Over Anode

$CO + H_2$

Steam Reformation

Ambient Air

O_2

Air Passes Over Cathode

Oxygen Ions React with Fuel in Fuel Cell

$CO \rightarrow CO_2$ $H_2 \rightarrow H_2O$

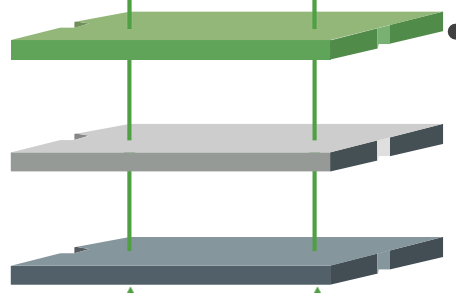

O^{-2} O^{-2}

Fuel Cell

Reaction Produces Electricity

e^-

Chemical reaction produces electricity when connected to a circuit

As long as there is fuel, air and heat, the process continues producing clean, reliable and affordable energy

Anode and cathode are made from special inks that coat the electrolyte and require no precious metals, corrosive acids or molten materials

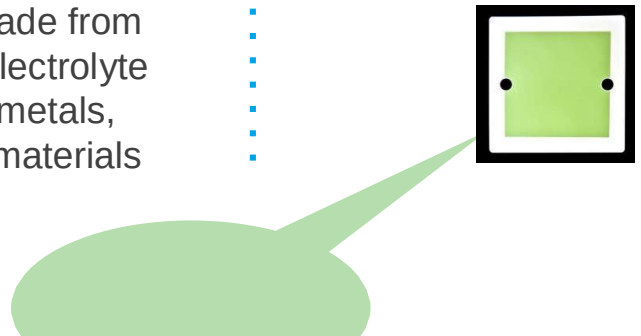

The fuel cell consists of an anode, a cathode and an electrolyte. Natural gas (CH4/Methane) is allowed to mix with steam (generated by electrical heaters, startup power requirement 15kW/1Mw for 8 hours) to form CO and H2 and this is allowed to pass through anode. The ambient air (O2) is allowed to pass through cathode. Here oxygen is allowed to split into ions and Oxygen ions are made to react with CO and H2 to form water vapor and CO_2 and electrons and these electrons are collected at anode and the movement of electrons gives the electricity (DC output 0.8V DC/cell). This DC power is converted into AC power and fed to the grid (415V 3 phase).
Working pressure inside cell is 10-15psi

The output voltage of each cell is 0.8V DC and inverter input voltage is (-380V -0V- +380 V). Inverter output voltage is 480V AC which converted to 415V 3phase AC by a 3 phase transformer.

THE ENERGY SERVER

Natural gas or Biogas → $CH_4 + 4O^{2-} \rightarrow 2H_2O + CO_2 + 8e^-$

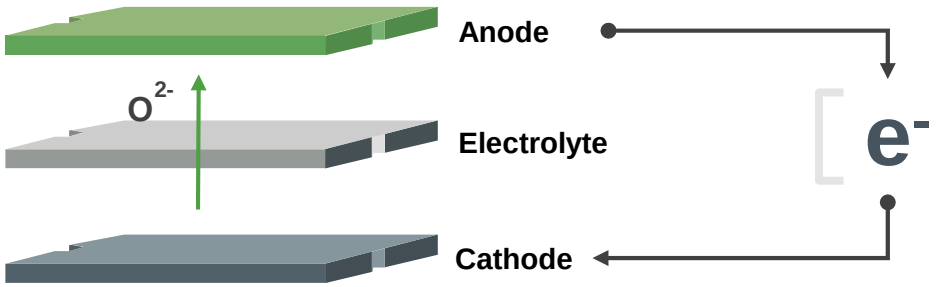

Ambient Air → $2O_2 + 8e^- \rightarrow 4O^{2-}$

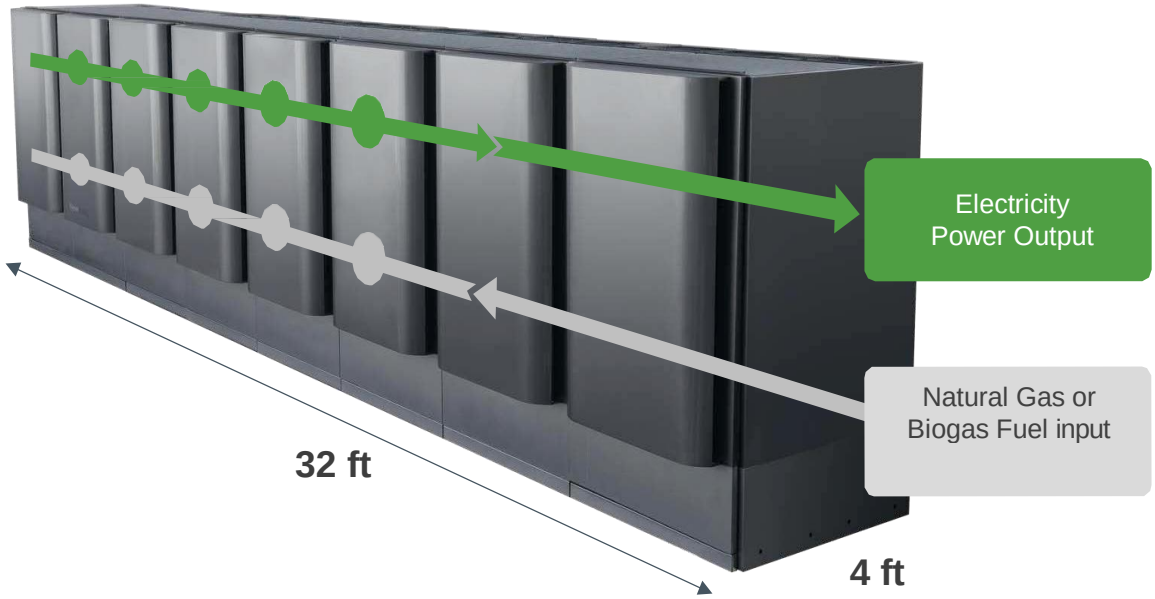

Fuel Cell 25W → Stack → Server Module → Server → Power Plant

Significance of Fuel Cell

- ❑ **Delivers Always-On, Onsite Power** (high capacity factor and availability). Hot-swappable and redundant design provides high availability >99%
- ❑ Converts Natural Gas/Biogas to Electricity **without Combustion**
- ❑ **World Leading Efficiency >60%** Beginning of Life and Lifetime Average Contracted Efficiency 54-56%
- ❑ Mission Critical Reliability in cases where **uninterrupted power** is required
- ❑ Clean: Low/no CO2, Virtually no NOx, SOx or Particulate Emissions
- ❑ **No water is required** during operation
- ❑ **No Man Power** requirement for operation, system is Remotely managed and monitored by Bloom Energy
- ❑ Electrical tie-in at 415V or 480V, 50Hz

***Note : all quoted figures features are as claimed by Bloom energy.**

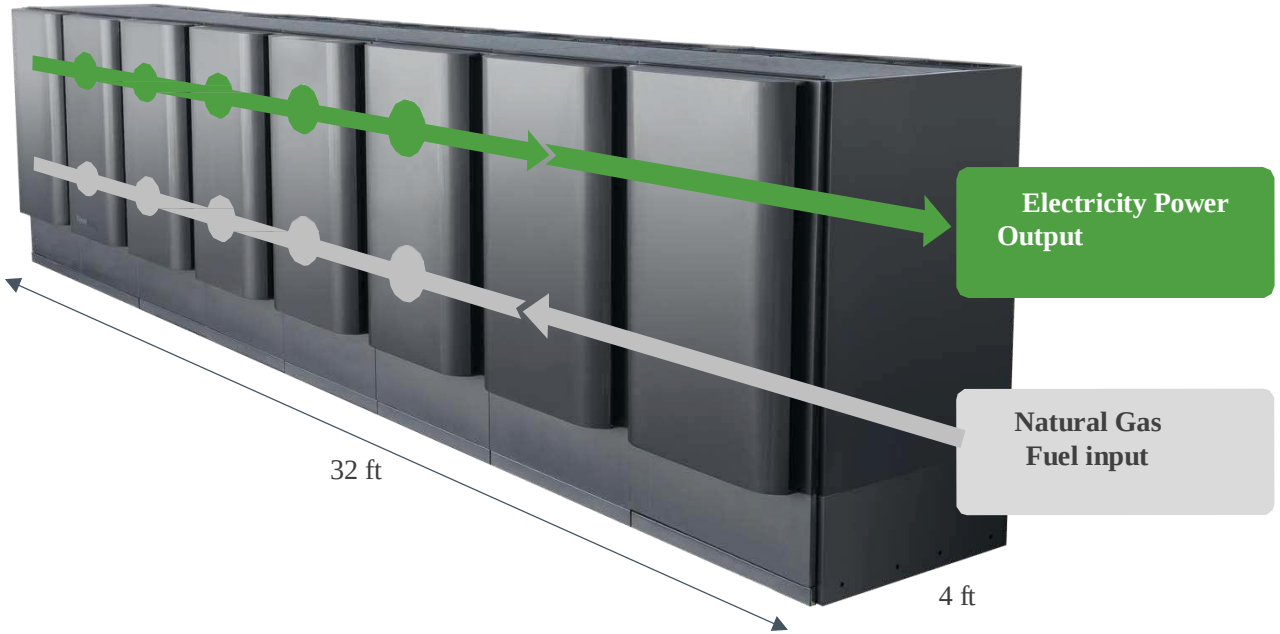

Modular and Reliable

Always On

Clean

GENERAL CONCEPT

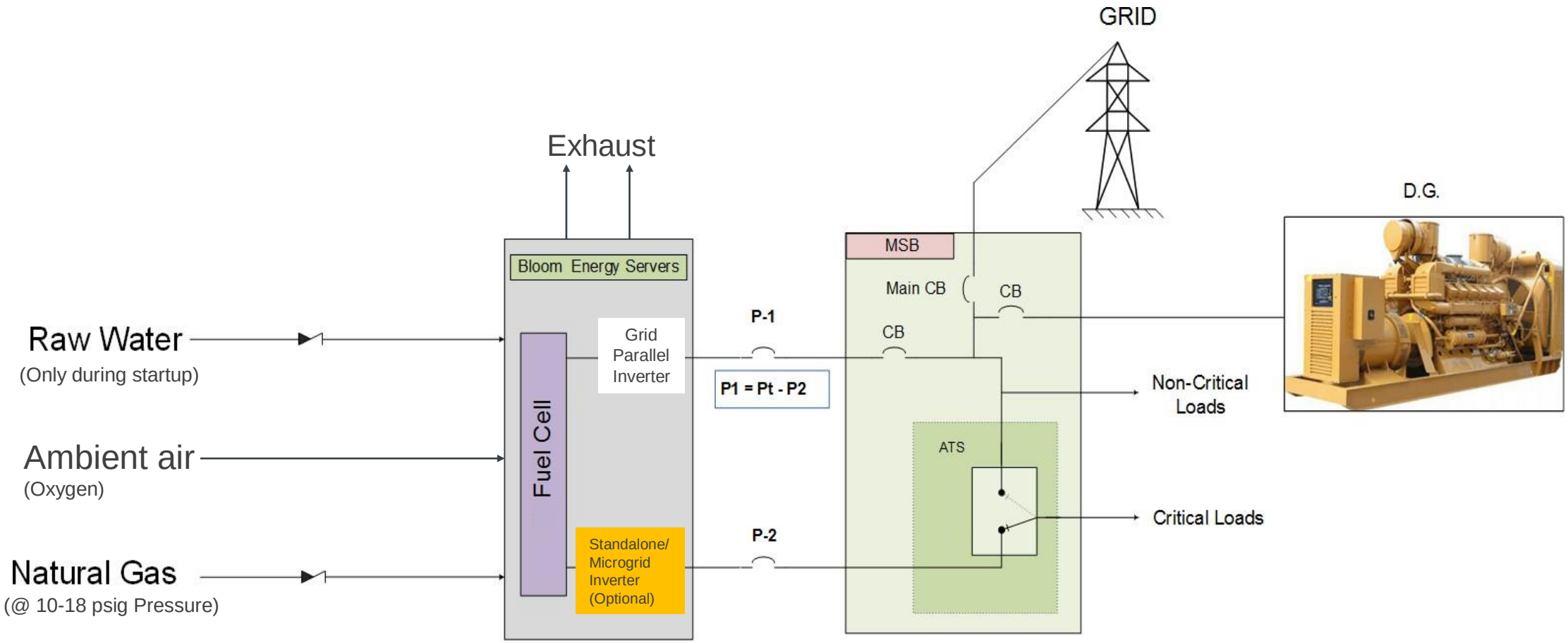

SERVER IN-BUILT PROTECTIONS

- Energy servers will have inbuilt Gas Safety Valves (GSV). These valves will take sensing from inbuilt gas pressure sensors, GSV will shut off if gas pressure drops below set value.

- Servers have Gas Over Pressure Protection (GSPP).

- Servers modules have independent temperature cut off circuits.

- Servers also have an inbuilt Advance control system has auto shut off features if there are pressure or temperature anomalies.

In addition to above inbuilt protections:

- Gas line is Normally built with emergency shutoff valves (Slam shut off valves)- Slam Shut-off valve is installed immediately after the filter & prior to the Regulator. It normally remains open, in case the outlet pressure of the regulator exceeds the permissible limit, the slam shut-off valve senses it through the impulse line & immediately shut off the flow to downstream

ADDED KEY FEATURES OF FUEL CELL ENERGY SERVERS

1. Fuel flexibility
   - ✓ Works on Natural gas
   - ✓ Works on Biogas
   - ✓ Works on Blend of Natural gas & Hydrogen up to 50:50 ratio

2. Grid parallel configuration works in parallel with Grid as well as DG.
   - ✓ As an added feature, Fuel cells can work in parallel with DG. While running in parallel with DG, Fuel cell provides offset to DG. Thus, Diesel consumption will be reduced/ No. of DGs running can be reduced.

3. Fuel cells can be integrated with Waste Heat recovery system to generate refrigeration or cooling using Vapor Absorption Machine.
   - ✓ Waste heat recovery adds up additional 17-19% efficiency.

4. There is no NOx, no SOx & no particulate matter emission from energy servers. CO2 emission is 65-72% relatively lower compared to Indian National Grid.

The below picture is a Fuel cell server of capacity 2.5 MW.

Gas inlet station inside Intel campus from GAIL:


SRR4 STP