सत्यमेव जयते

भारत सरकार

विद्युत मंत्रालय

केंद्रीय विद्युत प्राधिकरण

राष्ट्रीय विद्युत समिति प्रभाग

संख्या: CEA-GO-15-14/1/2021-NPC Division दिनांक: 19.07.2022

विषय: "वीडियो कांफ्रेंस के माध्यम से 24.06.2022 को आयोजित एनपीसी की विशेष बैठक का कार्यवृत्त- के संबंध मे |

महोदय,

उपरोक्त विषय से सम्बन्धित दस्तावेज आपकी जानकारी एवम आवश्यक कार्यवाही हेतु संलग्न है ।

संलग्नक : यथोपरि

भवदीय

ऋषिका 19/7/2022

(ऋषिका शरण)

मुख्य अभियंता एवं सदस्य सचिव, रा. वि. स.

सेवा मे :

1. सदस्य सचिव,उ क्षे वि स,नई दिल्ली -110 016
2. सदस्य सचिव,प क्षे वि स,मुम्बैई -400 093
3. सदस्य सचिव,द क्षे वि स,बेंगलुरु-560 009
4. सदस्य सचिव,पु क्षे वि स,कोलकता - 700 033
5. सदस्य सचिव,उ पु क्षे वि स,शिल्लोंग - 793 006

विशेष आमंत्रित:

1. श्री एस आर नरसिम्हन, अध्यक्ष एवं प्रबंध निदेशक, पोसोको, बी-9, कुतुब इंस्टीट्यूशनल एरिया, कटवारिया सराय, नई दिल्ली-110066
2. श्री के. श्रीकांत,, अध्यक्ष एवं प्रबंध निदेशक, पॉवरग्रिड
3. श्री पीसी गर्ग, सीओओ, सीटीयू, सौदामिनी, प्लॉट नंबर 2, सेक्टर-29, गुरुग्राम
4. श्री एम ए के पी सिंह, मुख्य अभियंता, आईटी और सीएस डिवीजन, सीईए
5. श्री के.के. प्रभाकर, मुख्य अभियंता, एसएलडीसी ,एमपीपीटीसीएल,जबलपुर
6. श्री के.एच. राठौड़, अपर मुख्य अभियंता (परियोजना), एसएलडीसी-गेटको, वडोदरा
7. श्री मनोज टौंक, एसोसिएट वाइस प्रेसिडेंट (एंडोर्स पी एंड एम) ,अदानी पावर लिमिटेड

प्रति सूचनार्थ:

1. अध्यक्ष, के. वि. प्रा., रा.वि.स.,
2. सदस्य, (ग्रिड प्रचालन एवं वितरण), के.वि.प्रा.

*****

केंद्रीय विद्युत प्राधिकरण

Central Electricity Authority

राष्ट्रीय विद्युत समिति

National Power Committee (NPC)

Minutes of Special Meeting of National Power Committee

held on 24.06.2022

1. Introduction

1.1 The Special Meeting of the National Power Committee was held on 24.06.2022 through Video Conference (VC). The list of the participants is at **ANNEXURE-A.**

1.2 Smt. Rishika Sharan, Member Secretary, NPC welcome all the members, special invitee and other participants to the special meeting of NPC. She expressed her gratitude to the Chairperson, CEA/NPC for sparing his valuable time in attending the meeting in spite of his busy schedule. She requested Chairperson, CEA/NPC to address the forum.

1.3 Chairperson, CEA welcomed all the distinguished participants in the special meeting of NPC. He briefly informed that in the last NPC meeting, a number of important issues like early issuance of Regional Energy Account, Implementations of revised Automatic Under Frequency Load Shedding (AUFLS) scheme, National Energy Account etc. were discussed. He informed that this Special meeting has been convened to discuss the 4 agenda items:

- WRPC agenda for integration of (Interface Energy Meter) IEMs into SCADA/EMS system for telemetry of meter data to MP SLDC,
- Review of the Islanding schemes and
- Status of RGMO and FGMO in the Interstate/Intrastate Generating stations.
- Status update of the Sub-Committee/Sub-group constituted under NPC

1.4 He further informed that that Technical Specification of Interface Energy Meters (IEMs) with Automatic Meter Reading (AMR) and Meter Data Processing (MDP) has been completed and will be issued soon. The new IEMs having features of telemetry of real time active power flow data to SLDC, which will help the states for efficient drawl management and reduction in the DSM penalties.

1.5 He appreciated the efforts made by MS, SRPC and his team for successful implementation of all three (3) new Islanding Schemes in the Southern Region (SR) and having SCADA visibility of all the seven (7) Islanding Schemes.

1.6 He requested Member Secretary, NPC to take up the agenda point for discussion.

2. WRPC agenda for integration of (Interface Energy Meter) IEMs into SCADA/EMS system for telemetry of meter data to MP SLDC.

a. Agenda

2.1 WRPC vide letter no. WRPC/Comml/2022/0242 dated 13.01.2022 **(Annexure-I)** informed regarding the proposal of MP SLDC for Integration of (Interface Energy Meters) IEMs into SCADA/EMS system.

2.2 As per proposal, the existing SEMs are having two communication ports, which can function independently for fetching the SEM data. The optical port is being used for fetching the weekly DSM data through Common Meter Reading Instrument (CMRI), for accounting purpose. The other RS 232 port available remains unused, the online real time data can be fetched from the existing SEM through the unused RS 232 port. This arrangement does not require additional meters or new communication facilities and therefore no additional cost is involved. MPSLDC's detailed proposal is enclosed along with **Annexure I.**

2.3 The WRPC letter was circulated to all RPCs, CTU, POWERGRID, POSOCO, SLDC-GETCO and Adani Power for their comments. The comments from ERPC, SRPC, CTU, POWERGRID, POSOCO, SLDC-GETCO and Adani Power have been received. The consolidated comments are below:

S.No.	Name of the Organization	Comments on the proposal of MP SLDC
1.	ERPC	1. The redundant RS-232 port of the existing SEM is proposed to be utilized for integration into SCADA through the RTU. Apart from this, RS-232 port is a read only port. The optical port will continue to be used for fetching data for weekly DSM accounting purpose. This seems to be technically feasible and without any commercial implication. It may also aid in better operational planning and deviation management in real time grid operation. Hence, implementation of the scheme on pilot basis may be allowed. 2. Locations for implementation of the scheme may be finalised after deliberation amongst the concerned parties i.e. MP SLDC, WRLDC, WRPC, CTU & CEA. 3. Based on the experience gained from the pilot scheme, implementation of the same on the complete control area of a regional entity may be decided. However, it may also be considered that CEA is already in the process of finalising the technical specification for 5/15 min IEM, AMR and MDP system on Pan India basis for transmitting real time MW data to SLDC SCADA terminals. 4. However, the following aspects may be considered before giving a go-ahead for the proposal: a. Cybersecurity aspects may be examined by taking views of IT Division of CEA.

		b. The data fetched from RS-232 port may be used only for making operational decisions and may not to utilize for raising commercial disputes.
2.	SRPC	1. As there is MODBUS RS232/485 extension units etc. so there are chances of data hanging due to these intermediate electronic equipments. 2. Confirmation from different OEMs (L&T, secure etc.) is required whether such port able to transfer the data if meters are integrated with SCADA. 3. Cyber security aspects need to be looked into. **The detailed comments are at <u>Annexure II</u>.**
3.	CTU	Present IEMs comprise of two ports. The details are- 1. Optical port, which is used for downloading weekly meter data through DCD and data is sent to RLDC by respective Gencos/TSPs in whose premises IEMs are installed. 2. RS232/RS485, kept as Spare port These two ports can function simultaneously and the RS232/RS485 port is suitable for connection with SCADA/EMS system. The proposal of MP SLDC for implementation of pilot project may be decided by CEA accordingly.
4.	POSOCO	1. The success of the pilot depends on the availability of Interface Energy Meter (IEM) data of all the interface meters of MP system on real time basis. It is desired that the availability of spare RS232/RS485 ports in all the RTUs at the interfaces may be checked as well as the feasibility of modifying the RTU database at these locations. Once the feasibility is ascertained, the pilot could be executed using the spare ports and additional communication links from meters to SLDC, MP without affecting the performance of the existing meters after obtaining the consent of the owner of the existing meters. 2. Pilot project on selected meter(s) can be done so that even if one set of meters (either main or check/standby) under pilot project is out, others set of standby meters is available for energy accounting and settlement. Once it is ascertained that pilot project is not affecting the performance of IEM, other set of IEM can also be taken simultaneously. 3. Data security related issues may be a concern due to transmission of data between different utilities. The compliance to the Cyber security provisions with the relevant

		orders of Ministry of Power, Government of India, Cyber security guidelines of CEA dated 07th October, 2021 and amendments thereof, CEA Standards as well as CERC Regulations and CERT-In Direction relating to information security practices, procedure, prevention, response and reporting of cyber incidents for Safe and Trusted Internet dated 28.04.2022 has to be ensured by the successful bidder/vendor. FAT/SAT would include Cyber security testing as per aforesaid mentioned guidelines.
4	POWERGRID	1. These substations are having OLD RTUs and it is not feasible to integrate IEMs through old RTU. 2. These old RTUs are planned to be replaced with new RTUs, which support IEMs integration. Hence, after replacement of OLD RTUs, integration of all the IEMs are possible using existing infrastructure after suitable modification of configuration of new RTUs. 3. However, continuity/availability of SCADA data to RLDC may be adversely affected with increased data traffic. Further, the configuration may get affected during any up gradation/modification done by POWERGRID on its RTU during routine O&M resulting in loss of energy data transmission. Detailed Comment is enclosed at **Annexure III.**
5.	SLDC- GETCO	1. Existing ABT meters are very old, requires confirmation from PGCIL for having RS232 port & RS 485 port with MODBUS are available in all the meters as most of the interface points are owned by PGCIL. 2. If RS232 Port & RS 485 port are available, then need to confirm that ports are spare/unused and it's in active mode for fetching Real time data. 3. Also request to PGCIL to confirm Spare RS 485/RS232 port availability in existing RTU to communicate with meter over MODBUS protocol. Each of the meter will have different set of memory mapping, hence RTU with different configuration for each type of meters will be required. SCADA & IT/OT network with Interface meters is not advisable with Cyber Security concern as Interface Meters is directly related with Energy accounting. 4. Most of the Sub Stations/ RTU's ownership by PGCIL, and data are directly reporting to WRLDC and Gujarat SLDC are

		getting data through ICCP from WRLDC, indirect reporting may lead to delay in reporting time. 5. After receiving confirmation from PGCIL for above point no-1 to 3 , to ensure latency and accuracy of data , SLDC GETCO suggest to carry out POC on different make of meters (ELSTER,L&T, SECURE etc.) installed at various interface point at Gujarat periphery. As DATA accuracy and latency is the main requirement for taking decision in real time grid operation, after verifying same only further inputs/comments in the matter will be possible.
6.	ADANI POWER	1. The data polled using the RS485 MODBUS protocol, as RS 485 port with MODBUS is available in all the meters. Using MODBUS only instantaneous parameters can only be polled, Block parameters for billing purpose cannot be polled on this port, and block data will continue to communicate over GPRS medium / MRI reading. 2. To integrate the MODBUS data, RTU and convertors will be required as additional component. Each of the meter will have different set of memory mapping, hence RTU with different configuration for each type of meters will be required. 3. Under "Technical Specification (TS) for ISTS Metering System" proposed system advance DCU is proposed which can poll instantaneous parameters and block data on Ethernet port and support DLMS protocol. 4. RS 485 and RS 232 are the legacy communication ports over Ethernet communication, which can give instantaneous parameters and block data on same port reliably, since these meters has already completed its useful life, we must immediately migrate to new generation of meters. 5. As per the SAMAST- (Scheduling, Accounting, Metering and Settlement of Transactions in electricity) guide lines settlements may possibly migrate to 5-minute, few make of existing meters doesn't support 5 min configuration. 6. Through the scheme proposed by MP, we also need to think of meter time sync through RTU mechanism. 7. Requirement prepared under "Technical Specification (TS) for ISTS Metering System" in western region has much wider scope and system will be in parallel to the present SCADA system, which is in line with the future metering requirement. However POC carried out by MP is interim arrangement to cater the present mismatch between pool account issued and decision taken based on the SCADA data. If the system gets

		implemented under ("Technical Specification (TS) for ISTS Metering System") which will be in the larger interest of all the beneficiaries will cover all the aspects highlighted. 8. Requirement prepared under "Technical Specification (TS) for ISTS Metering System has much wider scope, as compare to this POC, and POC carried out by MP has limited scope to cater their immediate requirement. 9. It is not advisable to integrate the substation SCADA to any other IT / OT network, in case we are exploring this route, then network security needs to be ensured.

b. <u>Deliberations in the meeting:</u>

2.4 MS, NPC briefed the issue in the meeting and requested MP-SLDC representative to give presentation on their proposal.

2.5 MP-SLDC given presentation on their proposal of Integration of Interface Energy Meters (IEMs) into SCADA/EMS system for telemetry of meter data to MP SLDC. The presentation is at **<u>ANNEXURE-B</u>.**

2.6 MP-SLDC representative informed that the proposed scheme is successfully tested at three locations i.e., Indore, Bhopal, and Jabalpur. He informed that the proposal of pilot project on standby meters at two ISTS point i.e. 400 kV Bhopal S/s and 400 kV Pithampur S/s is proposed in the agenda.

2.7 MP-SLDC representative was of the opinion that the proposal may be allowed as the DISCOMs are already facing huge financial issues and the proposal is a step in the right direction and ensures that the financial stress is mitigated. He also informed that if different meters are used, the data is always different and hence the same meter should be used. He informed that the testing has been done for the secure meters and L&T and there has been no interruptions observed. Further, the RS 232 is a read only port in the meter and there will be no issue regarding the cyber security.

2.8 POSOCO representative opined that the pilot project may be carried out. He was of the view that that data from meter may be transmitted directly to SLDC. However, he opined that success of the proposal depends on the availability of Interface Energy Meter (IEM) data of all the interface points in MP system on real time basis. It is desired that the availability of spare RS232/RS485 ports in all the RTUs at the interface points as well as the feasibility of modifying the RTU database at these locations may be checked, therefore, survey may be done at all interface point. Once the survey completed and feasibility is ascertained, the project may be implemented at all the interface points.

2.9 PGCIL representative appreciated the proposal of MP-SLDC. He was of the view that there may be data loss during telemetry of MW data to SLDC due to outage of communication channel. He raised concerns regarding effect of telemetry of real time data to RLDC system. He also informed that MODBUS protocol is comparatively weak in cyber security aspect and this needs to be ensured before implementation of pilot project. He further informed that pilot project may be done as suggested by PGCIL. However, where old RTUs are installed at PGCIL substations the

pilot project may be carried out after the replacement of old RTU with new RTUs. The PGCIL had proposed followings as the method of implementation:

I. For IEMs available at MPPTCL end, the meter data may be integrated with RTUs at MPPTCL substation.

II. For IEMs available at POWERGRID end, the meter data may be taken, through separate communication channel i.e. GPRS, etc. directly to SLDC.

2.10 COO, CTU opined that the pilot project as suggested by PGCIL may be done.

2.11 WRLDC representative opined that commercial accounting is a time bound activity as per CERC regulations. Therefore, the telemetry of MW data to SLDC should not affect the commercial accounting activity. He was of the view that pilot project may be done at the standby meters, however, there may be concerns since the standby meters are also used for validation of main meter data, which may affect the commercial accounting indirectly.

2.12 Member Secretary, WRPC opined that the pilot project may be implemented firstly for the standby meters at MP side of the interface points. The detailed discussion regarding the engineering of the pilot project may be done at regional level. If the results of the pilot project are good and it would not be affecting the commercial accounting activity and RLDC system, the project may be implemented at all the interface points.

2.13 Chief Engineer, IT & CS, CEA opined that the two ports in an IEM are provided for redundancy purpose and not for the telemetry of the active power data. He was of the view that there may be cyber risk in the MPPTCL system since the firewalls are not installed or installed firewall not configured properly. He further informed that many vulnerabilities were found in the reports and alerts issued by NCIIPC and CERT-In. He suggested that the proposal of MP may be discussed with the CERT-In before the designing and implementation of the project.

2.14 Member Secretary, WRPC stated that the concerns of Chief Engineer, IT & CS, CEA may be taken care of during the design and implementation of pilot project

2.15 Chairperson, CEA/NPC stated that proposal of MP SLDC in-principal agreed by the main stakeholders (PGCIL, CTU, POSOCO and MP). He suggested that the pilot project in line with the proposal of MP SLDC proposal may be implemented at two substation (one at new system and other at old system) in each region.

c. <u>Decisions</u>

1.1 The pilot project of MP SLDC proposal may be implemented for the standby meters at MP side at the ISTS interface points.

1.2 Similar projects may be implemented at the two ISTS substations (one at new system and other at old system) in each region.

1.3 The detailed discussion regarding the design and implementation of the pilot projects may be done at RPC (regional) level. The experience/results of the pilot project may be discussed at RPC level first and thereafter at NPC level.

1.4 The pilot project may be discussed with the CERT-In before the designing and implementation of the project to ensure the cyber security. The technical issues, cyber security issues may be taken care while implementing project without affecting the commercial accounting activity.

1.5 The telemetry data of Interface Energy Meters (IEMs) into SCADA/EMS system is only for the purpose of taking actions/decisions in real time for grid monitoring & discipline. It shall not be disputed by stakeholders by comparing it with the accounting data of RLDCs/RPCs

[Action: All RPCs/concerned state utilities]

2. Review of the Islanding schemes.

a. Agenda

2.1 The 11th meeting of NPC was held on 28.02.2022 through video conference in which following decisions were taken regarding Islanding Schemes:

i. NRPC to expedite the study of newly designed Islanding schemes in association with NRLDC/CPRI/respective state utilities of NR.

ii. RPCs to expedite the implementation of new islanding schemes.

iii. Six monthly review of islanding scheme needs to be carried out regularly especially for Category-I Islanding Schemes. Whenever there is a substantial change in island load or generation, the islanding scheme needs to be reviewed. SOP may be followed by all RPCs while designing and reviewing/operation of Islanding schemes.

iv. RPCs were requested to update the MIS report on monthly basis for further forwarding it to MoP by NPC Division. RPCs were also requested to carry out Inspection/Audit of essential components like UFR/ df/dt relays/ communication systems etc. as per Standard Operating Procedure (SOP).

2.2 The status of the Islanding Schemes (as on 22.04.2022) is given below:-

Region	Total Number of Islanding Schemes	No. of Implemented /In-service IS	No. of IS which are Under Implementation	No. of Newly proposed Islanding Scheme which are under design/Under Implementation	No. of Newly proposed Islanding Scheme which are Implemented/ In-service	No. of IS having SCADA visibility
SR	7	7	0	0	0	7
ER	10	4	4	2	0	5
NR	11	2	2	7	0	4
WR	12	6	1	5	0	0
NER	3	1	1	1	0	3
	43	20	8	15	0	19

2.3 The MIS report as on 24.04.2022 is at **Annexure-IV**.

RPCs are requested to update the Committee on the following:-

i. Progress made in implementation of new Islanding Scheme.

ii. Six monthly review of islanding scheme to be carried out regularly especially for Category-I Islanding Schemes.

iii. Inspection/Audit of essential components of Islanding Schemes like UFR/ df/dt relays/ communication systems etc. as per Standard Operating Procedure (SOP).

iv. MIS report of Islanding Scheme.

b. Deliberations in the meeting:

2.4 MS, NPC briefed the issue in the meeting.

2.5 Chairperson, CEA/NPC appreciated the efforts made by MS, SRPC and his team for successful implementation of all three (3) new Islanding Schemes in the Southern Region (SR) and having SCADA visibility of all the seven (7) Islanding Schemes.

2.6 He raised concern regarding slow progress in implementation of new Islanding Scheme by other RPCs. He suggested that column of SCADA visibility in above table needs to be more explicit regarding SCADA visibility of in-service and under implementation Islanding Schemes.

Region	Total Number of Islanding Schemes	No. of Implemented /In-service IS	No. of existing IS which are Under Implementation	No. of Newly proposed Islanding Scheme which are under design/Under Implementation	No. of Newly proposed Islanding Scheme which are Implemented/ In-service	No. of IS having SCADA visibility	Remarks
SR	7	7	0	0	3	7	-
ER	10	4	4	2	0	5*	*1 under implementation
NR	11	2	2	7	0	4*	*2 under implementation
WR	12	6	1	5	0	0	0
NER	3	1	1	1	0	3*	*2 under implementation/ design stage
	43	**20**	**8**	**15**	**0**	**19***	*5 under implementation/ design stage

**under Implementation IS*

2.7 MS, NERPC informed that Tripura Islanding scheme was reviewed and revised on 29.09.2021.Accordigly, additional UFRs to be procured and installed. 7 out of 20 additional UFRs already installed and the balance UFRs would be installed by June, 2022. For Guwahati Islanding scheme, draft DPR already prepared, the DPR will be submitted after BOQ is finalized by Utilities.

2.8 NRPC informed that newly proposed Islanding Schemes of state of Rajasthan are in DPR stage and the DPR may be submitted to NLDC in a month. Regarding newly proposed Islanding Schemes of state of Punjab, he informed that the schemes are in last stage of study and DPR may be submitted to NLDC shortly. He further informed that newly proposed Dehradun Islanding Scheme is not feasible as informed by the state representatives. NRPC had sought proper justification for non-feasibility of Dehradun Islanding scheme. Regarding newly proposed Agra Islanding, he informed that there may be possibility of overvoltage in the system while operation of Islanding scheme, therefore, transient state study would be required. He further informed that agreement to conduct transient state study has been done between CPRI and UP.

2.9 MS, ERPC informed that the Technical Committee has been formed for finalizing newly proposed Islanding Schemes of Ranchi and Patna. He also informed that the KBUNL Islanding scheme (Category- A IS) has been aborted as per the discussion of 188th OCC Meeting of ERPC.

2.10 MS, WRPC agreed to send the updated MIS report of Islanding Scheme to NPC Secretariat shortly.

c. Decisions

2.11 RPCs were requested to expedite the implementation of new islanding schemes and review of old Islanding schemes as per SOP.

2.12 RPCs were requested to update the MIS report on monthly basis for further forwarding it to MoP by NPC Division.

[Action: NRPC, WRPC, ERPC, NERPC]

3. Status of RGMO and FGMO in the Interstate/Intrastate Generating stations.

a. Agenda

3.1 The relevant regulations of IEGC are given below for reference:

Quote "

(i) Regulation 5.2 (f):

(ii) All thermal generating units of 200 MW and above and all hydro units of 10 MW and above, which are synchronized with the grid, irrespective of their ownership, shall have their governors in operation at all times in accordance with the following provisions:

Governor Action

i) Following Thermal and hydro (except those with upto three hours pondage) generating units shall be operated under restricted governor mode of operation with effect from the date given below:

a) Thermal generating units of 200 MW and above,

1) Software based Electro Hydraulic Governor (EHG) system: 01.08.2010

2) Hardware based EHG system : 01.08.2010

b) Hydro units of 10 MW and above : 01.08.2010.

i. First amendment to IEGC, 2010

After clause (iii) of sub-regulation (f) of Regulation 5.2 of Principal Regulations, following provision shall be inserted.

"Provided that if a generating unit cannot be operated under restricted governor mode operation, then it shall be operated in free governor mode operation with manual intervention to operate in the manner required under restricted governor mode operation

"Unquote.

3.2 NPC Secretariat via email dated 30.05.2022 sought the status of implementation of RGMO and FGMO in the regions. The status of RGMO and FGMO received from SRPC, NRPC, NERPC and ERPC is attached at **Annexure V.**

3.3 In place of restricted governor mode of operation (RGMO), the **report of the expert group to review IEGC has suggested free governor mode of operation** (FGMO) for all generating units in the country in order to arrest stead fall in the frequency in the event of a major grid disturbances.

3.4 As informed by POSOCO the onsite testing of primary frequency response of generating units is being carried out in line with provisions of IEGC. The onsite testing is being conducted by the respective agencies at the identified stations in close coordination with RLDCs and NLDC. As on 30th May 2022, the status of testing (based on testing agency) is enclosed at **Annexure VI.**

b. Deliberations in the meeting:

3.5 MS, NPC briefed the issue in the meeting.

3.6 It was observed from the data submitted by RPCs that some of the Units of generating station are both RGMO and FGMO enabled. However, a unit may be either RGMO or FGMO enabled. RPCs agreed to send the revised status of the same in the interstate, intrastate and IPP generating stations.

3.7 ED, POSOCO informed that the onsite testing of primary frequency response of generating units is being carried out in line with provisions of IEGC by M/s Siemens and M/s Solvania in close coordination with RLDCs and NLDC. He also informed that total 240 nos. of Generating station was allocated for testing of primary frequency response. He further informed that out of 200 nos. of Generating station was allocated to M/s Solvania, 136 nos. of generating stations were tested and tuned and out of 40 allocated to M/s Siemens, 27 nos. of generating stations were tested and tuned. The remaining units were not tested due to various reasons.

3.8 Chairperson, CEA requested POSOCO to share the detail procedure and testing reports of onsite testing of primary frequency response of generating units to NPC Secretariat. POSOCO agreed for the same.

3.9 MS, SRPC informed that primary frequency response testing in southern region of central sectors has been done on 21 generating stations out of 33 allocated generating stations by POSOCO. He further informed that SRPC along with POSOCO is conducting knowledge sharing workshop on onsite testing of primary frequency response of generating units for state sector generators.

3.10 Chairperson, CEA enquired about the provisions of governing system in generating units in CEA regulations. MS, SRPC informed that such provisions are mentioned in Central Electricity Authority (Technical Standards for Connectivity to the Grid) Regulations, 2007 and Central Electricity Authority (Technical Standards for Construction of Electrical Plants and Electric Lines) Regulations, 2010.

The relevant regulations of Central Electricity Authority (Technical Standards for Connectivity to the Grid) Regulations, 2007 is given below for reference:

Quote "

Clause 4 of sub-regulation 1 of Regulation Part II - Grid Connectivity Standards applicable to the Generating Units:

"All generating machines irrespective of capacity shall have electronically controlled governing system with appropriate speed/load characteristics to regulate frequency. The governors of thermal generating units shall have a droop of 3 to 6% and those of hydro generating units 0 to 10%."

"Unquote.

Some of the relevant regulations of Central Electricity Authority (Technical Standards for Construction of Electrical Plants and Electric Lines) Regulations, 2010 are given below for reference:

Quote "

(9) Steam Turbine and Auxiliaries-

(9) The steam turbine shall be provided with electronically controlled electro-hydraulic governing system. However, the steam turbines of rating higher than 200 MW shall be provided with back up governing system of mechanical hydraulic or electro- hydraulic type.

15. Gas Turbine and Auxiliaries-

(9) Gas turbine generating unit shall be controlled by an electrohydraulic governing system with 100% back up….

25. IC Engine and Auxiliaries-

(8) The IC engine shall be provided with micro-processor based control system. The governor shall be electronic type complying with latest version of relevant IS. An over speed trip mechanism shall be provided to automatically shut off fuel in case the set reaches above 10% of rated speed. An engine mounted emergency stop push button shall be provided to stop the engine during emergencies.

34. Governing System-

(1) Microprocessor based digital governing system shall be used for regulating the flow of water to the turbines for the control of active power (MW) thus providing the requisite speed/frequency control and load control. The speed sensing device shall be provided with the requisite redundancy. The performance requirements of the governing system shall be governed by relevant IS / IEC standards.

"Unquote.

c. <u>Decisions</u>

3.11 RPCs agreed to send the revised status of Primary Regulation in the interstate, intrastate and IPP generating stations as per the relevant regulations of first amendment to IEGC, 2010 and as suggested by Chairperson, CEA.

[Action: All RPCs]

3.12 POSOCO agreed to share the detailed procedure and testing reports of onsite testing of primary frequency response of generating units to NPC Secretariat, CEA.

[Action: POSOCO]

4. Status update of the Sub-Committee/Sub-group constituted under NPC.

a. Agenda

4.1 The following Sub-Committee/Sub-group were constituted under NPC:

i. Sub-Committee on the uniform philosophy of PMU locations, new analytics and requirement of up gradation of Control Centre under URTDSM project.

ii. Sub-Committee to study the AUFLS scheme and common approach for df/dt settings.

iii. Sub-group to finalize a common procedure for Power System Stabilizers (PSS) Tuning.

b. <u>Deliberations in the meeting:</u>

4.2 MS, NPC briefed the issue in the meeting and requested MS, WRPC **to** update the status of the work assigned to above Sub-Committee/Sub-group.

4.3 MS,WRPC informed that final draft report of all the work assigned to above Sub-Committee/Sub-group has been prepared and circulated to members for comments and after the comments received, draft report may be issued within a week or two.

4.4 POSOCO informed that they have submitted their comments on Power System Stabilizers (PSS) tuning and on the uniform philosophy of PMU locations, new analytics and requirement of up gradation of Control Centre under URTDSM project.

4.5 MS, NPC informed NPC division has submitted comments on the uniform philosophy of PMU locations, new analytics and requirement of up gradation of Control Centre under URTDSM project.

4.6 Chairperson, CEA advised MS, WRPC and all the members of the committee to expedite the work assigned to above Sub-Committee/Sub-group.

c. <u>Decisions:</u>

4.7 MS, WRPC and all the members of the committee are requested to expedite the work assigned to above Sub-Committee/Sub-group.

[Action: WRPCs and members of the above committees]

5. The meeting ended with Vote of thanks to the Chair.

****

LIST OF ANNEXURES FOR MINUTES OF SPECIAL MEETING OF NPC HELD ON 24.06.2022

Annexure	DESCRIPTION
A	List of Participants
I	MP- SLDC proposal from WRPC (please refer Annexure-I of agenda of the meeting)
II	SRPC comments on MP- SLDC proposal (please refer Annexure-II of agenda of the meeting)
III	POWERGRID comments on MP- SLDC proposal (please refer Annexure-III of agenda of the meeting)
B	MP-SLDC presentation on their proposal
IV	Updated MIS report of Islanding Schemes as per deliberations in the meeting.
V	Updated status of RGMO/FGMO received from RPC as per deliberations in the meeting.
VI	Testing of primary frequency response of generators received from POSOCO (please refer Annexure-VI of agenda of the meeting)

****

Annexure-A

List of Participants in the Special meeting of NPC held on 24.06.2022 through Video- Conference.

Central Electricity Authority (CEA)

1. B.K.Arya, Chairperson, CEA
2. M A K P Singh, Chief Engineer, IT & CS Division
3. Rishika Sharan, Chief Engineer, NPC Division
4. R M Rangarajan, Director, NPC Division
5. Himanshu Lal, Dy. Director, NPC Division
6. Saurabh Raj, Asstt. Director, NPC Division

SRPC

1. Asit Singh, Member Secretary
2. Meka Ramakrishna, Superintending Engineer (Commercial)
3. K P Madhu, Superintending Engineer (Operation)

WRPC

1. Satyanarayan S, Member Secretary
2. P D Lone, Superintending Engineer
3. D N Gawali, Superintending Engineer, Operation and Service Circle
4. Vikash Mundotia, Ex. Engineer & Asstt. Secretary
5. Sachin K. Bhise, Ex. Engineer, Admn.
6. Deepak Sharma, Ex. Engineer, Commercial & Study Circle

ERPC

1. N S Mondal, Member Secretary

NRPC

1. Naresh Bhandari, Member Secretary

NERPC

1. B. Lyngkhoi, Member Secretary

POSOCO

1. Debasis De, Executive Director
2. Vivek Pandey, General Manager

POWERGRID

1. R K Tyagi, Executive Director/OSD (Operations), POWERGRID

2. B B Singh, Chief Manager, POWERGRID

CTU

1. P C Garg, COO, CTU
2. Ashok Pal, Dy COO, CTU
3. Jasbir Singh, Chief GM, CTU
4. H S Kaushal, Senior GM, CTU
5. D K Karma, GM, CTU

WRLDC

1. V. Balaji, Executive Director
2. Pushpa S, Sr. GM
3. S. Usha

NTPC

1. Kamlesh Soni, Chief General Manager
2. Abhay G P Sahu, Dy. Manager

SLDC-MP

Representative of MP-SLDC

MSLDC

Representative of MSLDC

MSETCL

Dilip P Nandanwar

MSEDCL

Gopi Chand

GETCO

1. Shri Upendra Pande, Managing Director
2. Vipul Vyas (JP-IT)

MP GENCO

Girish Dixit

Adani Power

Manoj Taunk, Associate Vice President

SLDC GUJARAT

D N Shah

SLDC Chhattisgarh

1. Representative of SLDC – Chhattisgarh.

SLDC Orissa

1. Representative of SLDC – Orissa.

Other Participant

1. Additional CE,MPPGCL
2. Ayushman Dutta
3. S K Saxena
4. SE TCC Akola
5. Rangnath Shelke
6. K S Manothiya
7. SE (T&C) Jabalpur
8. Ajit Kumar Rai
9. Shreya Ghosh Prasad
10. Pradeep Singh Raghav
11. Ganesh Deshmukh
12. SE TCC Nagpur
13. P K Gargav
14. EE PAC Amravati

*****

Annexure-B

Integration of Energy Meter in SCADA/EMS system

SLDC MP

Introduction

- It has been observed that there is difference between the DSM charges computed from the real time SCADA values and DSM account prepared by WRPC from the data of interface meters.
- If real time data of interface meters is also available to the system operators, it would be immense help for adhering to the grid discipline and also minimize the financial burden of DSM charges on DISCOMS.

Existing Arrangement of Energy Meter and RTU Communication

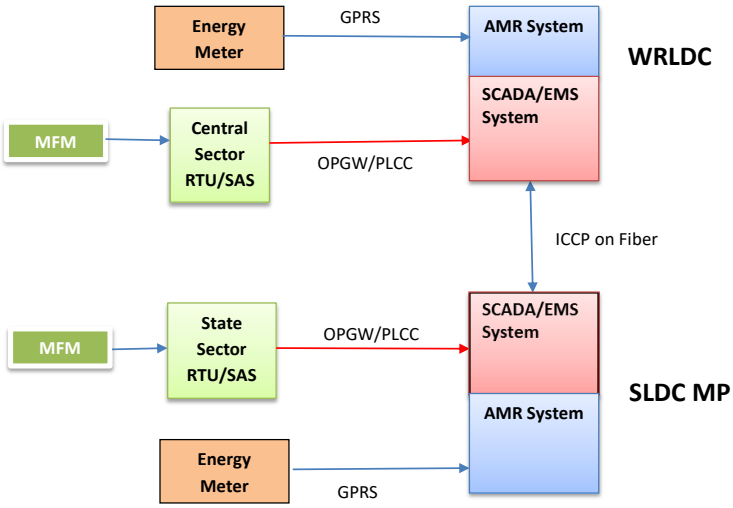

Difference in the deviation values calculated through SCADA/EMS system and the energy accounting system

- The drawl of MP from central sector is calculated by algebraic sum of energy drawn at approx. 85 No interface points between STU and ISTS/inter state lines, located at around 35 No. locations.

- In SCADA/EMS system, the real time data of active power is acquired and the same is utilised for working out average values for the 15-minute time block. The MP schedule is received in SCADA through WRLDC and deviation for the 15 minute time block is calculated accordingly.

- In Energy Accounting System, for working out deviation, the block wise implemented schedule of MP is received through WRLDC Portal and drawl data of the interface points is downloaded at AMR system of WRLDC.

Difference in the deviation values calculated through SCADA/EMS system and the energy accounting system

The difference in the deviation values calculated through SCADA/EMS system and the energy accounting system is observed due to following reasons: -

- Different source of data (MFM & Energy meter) in two systems.
- Long data Channel having multiple nodes/multiple systems (The data at SLDC is received through WRLDC , for eg. PGCIL Jabalpur 400 KV S/s data which is adjoining to SLDC is first goes to WRLDC and then received to SLDC through WRLDC)
- The long data channel and multiple system involvement (SLDC & WRLDC SCADA) results in outage of communication channel in SCADA system while in AMR effect of communication system outage is not there as AMR data is downloaded periodically whenever communication channel is available.

PROPOSED SCHEME OF INTEGRATION OF ENRGY METERS INTO SCADA

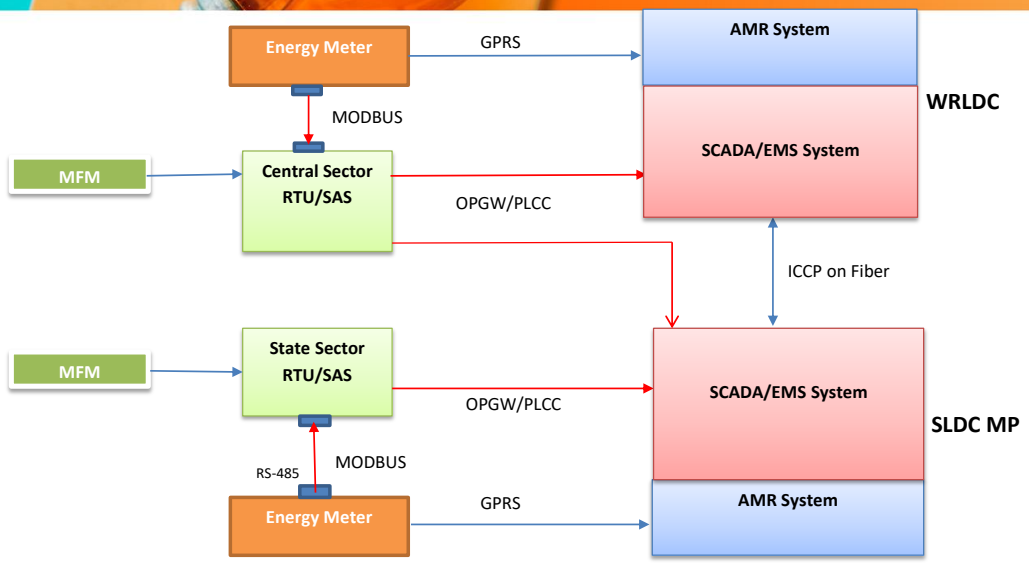

PROPOSED SCHEME OF INTEGRATION OF ENRGY METERS INTO SCADA

❖ The in-house scheme developed for integration of Interface meters with RTUs using RS 485 port through MODBUS Protocol has been successfully tested at following locations:-

- 220 KV Jabalpur S/s
- 132 KV Indore Chambal S/s
- 132 KV Ayodhya Nagar S/s

❖ Before deploying the scheme at all interface points, it is proposed to carry out a pilot project for integration of energy meters installed at ISTS interface points having standby/check meters. For pilot project, SLDC MP has identified the standby energy meters installed at the MPPTCL Sub stations detailed hereunder:

Name of Substation	Feeder / Interface meter
400 KV Bhopal	400 KV Itarsi Ckt-1 & 2
	400 KV BDTCL Ckt-1 & 2
400 KV Pithampur	400 KV Indore PG Ckt-1
	400 KV Indore PG Ckt-2

ADVANTAGES OF SCHEME

- This scheme for providing real time data of Interface meters to SLDC does not involve any additional equipment as data acquired using spare RS232/485 port which is already available in energy meters and not utilised presently.

- The data acquired in RTU/SAS s through RS232/485 port, which is read only and will not affect the functioning of data on other ports i.e AMR system data.

- The interface energy meter integration with RTU/SAS is cyber secured as it is based on MODBUS protocol through RS-232/485 port. The MODBUS protocol is based on serial communication with devices in Master & Slave mode. In this case RTU/SAS will act as master and meter will communicate with master only on request of RTU/SAS.

- It is tested that the data update rate of energy meter data through RTU is not affected even during downloading of energy meter data through AMR system.

ADVANTAGES OF SCHEME

- The scheme will provide data into SCADA system in real time i.e. data update rate from energy meter to RTU is within one seconds. The data update rate through RTU depends on the communication channel and is in the range of 5-10 seconds (similar to rate of present system of acquiring data through MFM).

- The time stamping of data is done at RTU level and only for digital data. Real time data acquired in SCADA system will not be affected even when energy meter is having time drift /time stamping/GPS issue in energy meter.

- Presently SLDC MPPTCL has tested the integration with RTU as Substation Automation System (SAS) system is not available in state network. However, integration of meter with SAS system is easily possible either through MODBUS available in BCU or through gateway of SAS system.

INTEGRATION OF ENERGY METER WITH PMU

- SLDC MP has also tested the integration of Energy Meter with Phasor Measurement Unit (PMU) at 220 KV S/s Jabalpur using RS 485 port through MODBUS Protocol.

- The real time data update rate as observed was less than 1 second.

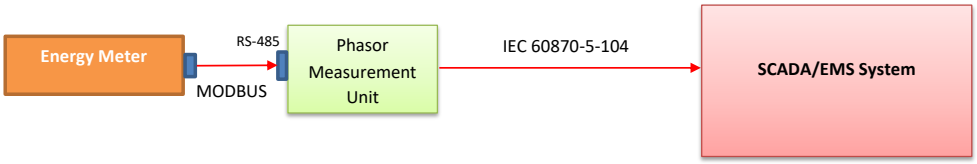

CONCLUSION

- On implementing this scheme at all the interface points of STU with ISTS, real time data of interface meters shall also be available in SCADA and will ensure better management of drawl of State from the Regional Grid.
- The proposed implementation shall not be in violation to any regulatory provisions and nor have any technical constraint.
- The scheme of display of real time data of interface meters shall be beneficial for all the Load Despatch Centres of the country .

Thanks

For any queries, connect to:-

Rajesh Gupta
Superintending Engineer, SLDC MP
9425805182
rajeshgpta@yahoo.co.in

ANNEXURE -IV

Overview of the status of Islanding Scheme in all Regions							
Regions	**Total Number of Islanding Schemes**	**No. of Implemented/Inservice IS (Green Color)**	**No. of IS which are Under Implementation (Yellow Color)**	**No. of Newly proposed Islanding Scheme which are under design/Under Implementaion stage (Red Color)**	**No. of Newly proposed Islanding Scheme which are Implemented/Inservice**	**No. of IS having SCADA visibility**	**Remarks**
SR	7	7	0	0	3	7	
ER	10	4	4	2	0	5*	*1- IS under implementation
NR	11	2	2	7	0	4*	*2- IS under implementation
WR	12	6	1	5	0	0	0
NER	3	1	1	1	0	3*	*2- IS under implementation/design stage
	43	**20**	**8**	**15**	**3**	**19***	*5- IS under implementation/design stage

**under Implementation IS*

Central Electricity Authority
National Power Committee Division

Monthly MIS report - Islanding Scheme (IS) of Sothern Region (SR)
Status updated on ……. 24.06.2022

SN (Color Coding for Island Implementation)	Name of Islanding Scheme	Category A/B	Sub Category- (City/Major Town/ Strategic Load/Sensitive Generation)	Status (Category A -In-Service/ Under Review/ Reviewed & Under Implementation) (Category B-DPR Preparation/Study/ Design/ Approval/Procurement/Commissioning/Implementation)	Timeline for completion of Review/ Reviewed & Under Implementation for Category A Timeline for implementation for Category B (DPR Preparation/Study/ Design/ Approval/Procurement/Commissioning/Implementation)	Progress of the scheme during the last month	Healthiness of the Scheme	Timeline for SCADA Visibility in Sub SLDC/ SLDC/ RLDC	Remarks, if any (Major Change in the scheme may also be intimated)
	I	II	III	IV	V	VI	VII	VIII	IX
Category I									
1	Hyderabad IS	A	City/Major Town/ Strategic Load	Reviewed scheme implemented w.e.f. 31.07.2021/ In service	Review completed on 05.03.2021. Reviewed scheme put into service w.e.f. 31.07.2021	NA	Healthy	November, 2021/ Completed on 30.11.2021	—
2	Chennai IS	A	City/Major Town/ Strategic Load	Reviewed scheme implemented	Review completed on 18.05.2021. Reviewed scheme put into service w.e.f. 31.05.2022	TANTRANSCO confirmed completion of installation and setting of 1 no. pending UFR of Chennai islanding scheme	Healthy	November, 2021/ Completed on 28.02.2022	—
3	Kudankulam IS	A	City/Major Town/ Strategic Load/ Sensitive Generation	Reviewed scheme implemented w.e.f. 31.12.2021/ In Service	Review completed on 18.08.2021. Reviewed scheme put into service w.e.f. 31.12.2021	All stakeholders including TANTRANSCO confirmed completion of works for implementation of Kudankulam island.	Healthy	December, 2021/ Completed on 31.03.2022	
4	Bengaluru IS	B	City/Major Town/ Strategic Load	Implemented w.e.f. 31.05.2022/ In-Service	The Scheme was identified in December 2020. Design completed in July, 2021, and the scheme was put into service w.e.f. 31.05.2022.	All stakeholders including KPCL confirmed completion of works for implementation of Bengaluru island.	NA	December, 2021/ Completed on 31.05.2022	—
Category II									
5	Neyveli IS	A	City/Major Town/ Strategic Load	Reviewed Scheme implemented w.e.f. 01.11.2021/ In-Service	Review completed on 04.06.2021; Reviewed scheme put into service w.e.f. 01.11.2021	Implementation of the reviewed scheme completed by all stake-holding Utilities including TANTRANSCO.	Healthy	November, 2021/ Completed on 28.02.2022	—
6	Visakhapatnam IS	B	City/Major Town/ Strategic Load	Implemented w.e.f. 31.07.2021/ In-Service	The Scheme was identified in Jan 2020, but owing to Covid-19 pandemic, the scheme was taken up for implementation in January, 2021. The scheme was put into service w.e.f. 31.07.2021.	NA	Healthy	Novemeber, 2021/ Completed on 30.11.2021	—

7	Vijayawada IS	B	City/Major Town	Implemented w.e.f. 30.11.2021/ In-Service	The Scheme was identified in April 2021. Design completed in July, 2021, and the scheme was put into service w.e.f. 30.11.2021	NA	Healthy	Novemeber, 2021/ Completed on 30.11.2021	—

Central Electricity Authority
National Power Committee Division
MIS report - Islanding Scheme (IS) of Western Region (WR)

status as on 24.06.2022

S.No. (Color code for Islanding Scheme)	Name of Islanding Scheme	Category A/B	Sub Category- (City/Major Town/ Strategic Load/Sensitive Generation)	Status (Category A -In-Service/ Under Review/ Reviewed & Under Implementation) (Category B-DPR Preparation/Study/ Design/ Approval/Procurement/Commissioning/Implementation)	Timeline for completion of Review/ Reviewed & Under Implementation for Category A Timeline for implementation for Category B (DPR Preparation/Study/ Design/ Approval/Procurement/Commissioning/Implementation)	Progress of the scheme	Healthiness of the scheme	Timeline for SCADA Visibility in Sub SLDC/ SLDC/ RLDC	Remarks, if any (Major Change in the scheme may also be intimated)
	I	II	III	IV	V	VI	VII	VIII	IX
Category I									
1	Mumbai Islanding Scheme	A	City/ Strategic Load	Implemented/Inservice	Last reviewed on 04.04.2021 and no operational constraints found.	NA	Healthy	Aug 2022	System study is being carried out at IITB and further review, if any, to be taken after outcome of study. Draft report has already submitted by IITB to Tata Power and final report is expected by January 2022.
2	Uran Islanding Scheme	A	City/Major Town	Implemented/Inservice	Scheme last reviewed on 04.04.2021 and no modification required and no operational constraint found.	NA	Healthy	Aug 2022	—
3	Surat Islanding Scheme	A	City/Major Town	Implemented/Inservice	Scheme last reviewed on 04.04.2021 and no modification required and no operational constraint found.	NA	Healthy	Aug 2022	—
4	Ahmedabad City Islanding Scheme	A	City/Major Town/ Strategic Load	Implemented/Inservice	Scheme last reviewed on 04.04.2021 and no modification required and no operational constraint found.	NA	Healthy	Aug 2022	—
5	KAPS 1&2 Islanding Scheme.	A	Sensitive Generation	Implemented/Inservice	Scheme last reviewed on 04.04.2021 and no modification required and no operational constraint found.	NA	Healthy	Aug 2022	—
6	KAPS 3&4 Islanding Scheme.	A	Sensitive Generation	Under Implementation	Last reviewed on 04-07 June, 2021.	—	Healthy	Aug 2022	—
7	Nagpur Islanding Scheme	B	City/Major Town/ Strategic Load	Design/Engineering Stage.	Schematic design finalised on during discussion on 01.04.2021, 24.06.2021, 26.06.2021	Detailed engineering is under progress.	NA	NA	—
8	Jamnagar Islanding Scheme	B	City/Major Town/ Strategic Load	Design/Engineering Stage.	Schematic design finalised on during discussion on 01.04.2021, 24.06.2021.	Detailed engineering is under progress.	NA	NA	—
9	Bhuj(Anjar-Kukma) Islanding Scheme.	B	City/Major Town/ Strategic Load	Design/Engineering Stage.	Schematic design finalised on during discussion on 01.04.2021, 24.06.2021.	Detailed engineering is under progress.	NA	NA	—
10	Jabalpur Islanding Scheme	B	City/Major Town/ Strategic Load	Design/Engineering Stage.	Schematic design finalised on during discussion on 01.04.2021, 24.06.2021.	Detailed engineering is under progress.	NA	NA	—
11	Raipur Islanding Scheme	B	City/Major Town	Design/Engineering Stage.	Schematic design finalised on during discussion on 01.04.2021, 24.06.2021, 28.06.2021.	Detailed engineering is under progress.	NA	NA	—
Category II									
12	Vadodara/GIPCL Islanding Scheme.	A	Nandesari Industrial Load	Implemented/Inservice	Scheme last reviewed on 04.04.2021 and no modification required and no operational constraint found.	NA	Healthy	Aug 2022	—

Category of Islanding Schemes:	
Category 'A' IS	Islanding Schemes which are existing or already planned and in implementation stage.
Category 'B' IS	Islanding Schemes which are newly proposed.
Category-'I' IS	Islanding Schemes which are designed for the major cities, senstive generation or strategic loads.
Category-'II' IS	Islanding Schemes other than category I are Category II IS
Colour codes of Islanding Schemes:	
Green	Implemented/In service Islanding Scheme
Yellow	Under review/ Under Implementation Islanding Scheme
Red	Newly proposed Islanding Scheme which are under design/under implementaion stage

NA	**Not Applicable**

Central Electricity Authority

status as on 24.06.2022

S.No. (Color code for Islanding Scheme)	Name of Islanding Scheme	Category A/B	Sub Category- (City/Major Town/ Strategic Load/Sensitive Generation)	Status (Category A -In-Service/ Under Review/ Reviewed & Under Implementation) (Category B-DPR Preparation/Study/ Design/ Approval/Procurement/Commissioning/Implementation)	Timeline for completion of Review/ Reviewed & Under Implementation for Category A Timeline for implementation for Category B (DPR Preparation/Study/ Design/ Approval/Procurement/Commissioning/Implementation)	Progress of the scheme	Healthiness of the scheme	Timeline for SCADA Visibility in Sub SLDC/ SLDC/ RLDC	Remarks, if any (Major Change in the scheme may also be intimated)
	I	II	III	IV	V	VI	VII	VIII	IX
Category I									
1	Kolkata (CESC) IS	A	City/Major Town/ Strategic Load	Implemented/ In-Service.	The scheme was last reviewed in February, 2021. No operational constraints have been reported.	NA	Healthy	Implemented on 13.11.2021	—
2	Patna IS	B	City/Major Town/ Strategic Load	Design Stage	Review of islanding study & designing of the logic: Completed Implementation of Islanding Scheme: By December'2022	As per the decision of 45th TCC & ERPC Meeting held on 25th and 26th March'2022, ERPC vide letter no. ERPC/Operation/IS/2022/97 dated 18.04.2022 (Annexure) constituted a Technical Committee based on the nominations received for finalizing Patna Islanding Scheme.	NA	-	—
3	Ranchi IS	B	City/Major Town/ Strategic Load	Under Study	Feasibility study would again be done after the commissioning of PVUNL units.	As per the decision of 45th TCC & ERPC Meeting held on 25th and 26th March'2022, ERPC vide letter no. ERPC/Operation/IS/2022/97 dated 18.04.2022 (Annexure) constituted a Technical Committee based on the nominations received for finalizing Ranchi Islanding Scheme.	NA	-	—
Category II									
4	Bakreswar TPS IS	A	Industrial and Railway load	Implemented/ In-Service.	The scheme was last reviewed in February, 2021. No operational constraints have been reported.	NA	—	Implemented in January, 2022	—
5	Haldia (Tata Power) IS	A	Industrial areas of Haldia and Port	Implemented/ In-Service.	The scheme was last reviewed in February, 2021. No operational constraints have been reported.	NA	—	Implemented in January, 2022	—
6	Howrah (Bandel) IS	A	Industrial load	Implemented/ In-Service.	The scheme was last reviewed in February, 2021. No operational constraints have been reported.	NA	—	Implemented in January, 2022	—
7	IB valley TPS IS	A	MCL Load	Under-implementation.	The scheme is under implementation and expected to be completed by July 2022	In the 190th OCC meeting, OPTCL representative submitted that the installation, commissioning, and testing of DTPC at both Budhipadar and OPGC end was completed. OPGC representative submitted that end to end signal testing and wiring from switchyard to relay panel had been completed. The testing would be done during shutdown or outage of the units.	NA	April, 2022	—
8	Farakka STPS, NTPC IS	A	Industrial & ECL Load	Under revision	—	—	NA	Implemented in December'2021	Under revision due to change in network (220 kV FSTPS-Lalmatia S/C line has been out because of collapse of several towers in the storm in April,2021
9	Chandrapura IS of DVC System	A	Industrial load	Under revision	The scheme is under Review and scheme is expected to complete by September 2022.	n the 190th OCC meeting, DVC representative submitted that 3 bids were received which were opened on 18th April 2022. He further submitted that the technical evaluation is under progress and the commercial evaluation would be completed by the end of June 2022.	NA	September, 2022	Discussed in Special Meeting of ERPC held on 06.08.2021. Original scheme was with stage A of CTPS (3x120 MW). As stage A of CTPS has been retired, this scheme is being evolved considering the stage B of CTPS (2x250 MW).
10	KBUNL IS of Bihar	A	Industrial & Station Load	-	Scheme aborted	KBUNL **Islanding scheme has been aborted** as per the discussion of 188th OCC Meeting. Further, possibilities may be explored to study of Islanding scheme considering the Barauni units. The hardware procured for KBUNL Islanding scheme may be used for the same.	NA	-	—

Category of Islanding Schemes:	
Category 'A' IS	Islanding Schemes which are existing or already planned and in implementation stage.
Category 'B' IS	Islanding Schemes which are newly proposed.
Category-'I' IS	Islanding Schemes which are designed for the major cities, senstive generation or strategic loads.
Category-'II' IS	Islanding Schemes other than category I are Category II IS
Colour codes of Islanding Schemes:	
Green	Implemented/In service Islanding Scheme
Yellow	Under review/ Under Implementation Islanding Scheme
Red	Newly proposed Islanding Scheme which are under design/under implementaion stage

NA	**Not Applicable**

Central Electricity Authority
National Power Committee Division
MIS report - Islanding Scheme (IS) of Northern Region (NR)

status as on 24.06.2022

S.No. (Color code for Islanding Scheme)	Name of Islanding Scheme	Category A/B	Sub Category- (City/Major Town/ Strategic Load/Sensitive Generation)	Status (Category A -In-Service/ Under Review/ Reviewed & Under Implementation) (Category B-DPR Preparation/Study/ Design/ Approval/Procurement/Commissioning/Implementation)	Timeline for completion of Review/ Reviewed & Under Implementation for Category A Timeline for implementation for Category B (DPR Preparation/Study/ Design/ Approval/Procurement/Commissioning/Implementation)	Progress of the scheme	Healthiness of the scheme	Timeline for SCADA Visibility in Sub SLDC/ SLDC/ RLDC	Remarks, if any (Major Change in the scheme may also be intimated)
	I	II	III	IV	V	VI	VII	VIII	IX
Category I									
1	Delhi IS	A	City/Major Town/ Strategic Load	In service/ Under revision	Submission of timeline for completion of Review of Scheme is pending on part of Delhi SLDC.	—	Healthy	Visible in Delhi SLDC	—
2	NAPS IS	A	Sensitive Generation	Implemented/Inservice	The review of IS has been done with peak load of Summer and Winter 2019-20 and no operational constraints found.	NA	Healthy	Visible in UP SLDC	—
3	Lucknow (Unchahar) IS	A	City/Major Town	Under Design Stage	—	UP has got offer from CPRI for study. The estimated time of study is 5 months from date of acceptance.	NA	Visible in UP SLDC	
4	RAPS IS	A	Sensitive Generation	Implemented/Inservice	Review of IS has been done in view of last Peak/off-peak loading and no operational constraints found.	Rajasthan SLDC has created SCADA display of Islanding scheme.	Healthy	Visible in Rajasthan SLDC	RRVPN has reviewed the Islanding Scheme and has suggested the consideration of additional transmission lines to manage load generation balance at different load scenario. Proposed scheme is being deliberated at OCC level.
5	Dehradun IS	B	City/Major Town/ Strategic Load	Planning / Design Stage	—	Matter is pending at Uttarakhand SLDC for finalization/rejection of scheme.	NA	Sept 2022	
6	Agra IS	B	City/Major Town/ Strategic Load	Planning / Design Stage	—	UP has got offer from CPRI for study. The estimated time of study is 5 months from date of acceptance.	NA	Sept 2022	
7	Jodhpur-Barmer-Rajwest IS	B	City/Major Town/ Strategic Load	Planning / Design Stage	The Planning/design of the scheme is in progress.	Scheme/Study was approved in 195th OCC meeting held on 24.05.2022. Implementation is pending at state end.	NA	Sept 2022	
8	Nabha Power Rajpura IS	B	City/Major Town/ Strategic Load	Planning / Design Stage	Scheme design is being finalized and will be submitted to CPRI for study	Punjab has sent the offer to CPRI for study of Islanding Schemes. CPRI has asked for PSSE file for dynamic study which is being coordinated with NRLDC. Timeline: 6 months for implementation after CPRI study.	NA	Sept 2022	—
9	Pathankot-RSD IS	B	City/Major Town/ Strategic Load	Planning / Design Stage	Scheme design is being finalized and will be submitted to CPRI for study	Punjab has sent the offer to CPRI for study of Islanding Schemes. CPRI has asked for PSSE file for dynamic study which is being coordinated with NRLDC. Timeline: 6 months for implementation after CPRI study.	NA	Sept 2022	—
10	Suratgarh IS	B	Strategic Load	Planning / Design Stage	The Planning/design of the scheme is in progress.	Scheme/Study was approved in 195th OCC meeting held on 24.05.2022. Implementation is pending at state end.	NA	Sept 2022	

Category II									
11	Talwandi Sabo IS	B	City/Major Town	Planning / Design Stage	Scheme design is being finalized and will be submitted to CPRI for study	Punjab has sent the offer to CPRI for study of Islanding Schemes. CPRI has asked for PSSE file for dynamic study which is being coordinated with NRLDC. Timeline: 6 months for implementation after CPRI study.	NA	Sept 2022	__

Category of Islanding Schemes:					
Category 'A' IS	Islanding Schemes which are existing or already planned and in implementation stage.				
Category 'B' IS	Islanding Schemes which are newly proposed.				
Category-'I' IS	Islanding Schemes which are designed for the major cities, senstive generation or strategic loads.				
Category-'II' IS	Islanding Schemes other than category I are Category II IS				
Colour codes of Islanding Schemes:					
Green	Implemented/In service Islanding Scheme				
Yellow	Under review/ Under Implementation Islanding Scheme				
Red	Newly proposed Islanding Scheme which are under design/under implementaion stage				

NA	**Not Applicable**

Central Electricity Authority
National Power Committee Division
MIS report - Islanding Scheme (IS) of North Eastern Region (NER)

status as on 24.06.2022

S.No. (Color code for Islanding Scheme)	Name of Islanding Scheme	Category A/B	Sub Category- (City/Major Town/ Strategic Load/Sensitive Generation)	Status (Category A -In-Service/ Under Review/ Reviewed & Under Implementation) (Category B-DPR Preparation/Study/ Design/ Approval/Procurement/Commissioning/Implementation)	Timeline for completion of Review/ Reviewed & Under Implementation for Category A Timeline for implementation for Category B (DPR Preparation/Study/ Design/ Approval/Procurement/Commissioning/Implementation)	Progress of the scheme	Healthiness of the scheme	Timeline for SCADA Visibility in Sub SLDC/ SLDC/ RLDC	Remarks, if any (Major Change in the scheme may also be intimated)
	I	II	III	IV	V	VI	VII	VIII	IX
Category I									
1	Tripura Islanding Scheme.	A	City/Major Town	Reviewed Scheme under implementation	The scheme was reviewed and revised on 29.09.2021. 7 out of 20 additional UFRs already installed. The balance UFRs would be installed by July, 2022.	—	—	Completed	—
2	Upper Assam (Assam-I) Islanding Scheme.	A	City/Major Town	Implemented/Inservice	The scheme was reviewed on 29.09.2021 and the Revised scheme implemented & recorded in 57th PCC Meeting held on 15th February, 2022.	Completed	Completed	Completed	—
3	Guwahati (Assam-II) Islanding Scheme	B	City/Major Town	Planning / Design Stage.	Design reviewed on 18.01.2022. Draft DPR already prepared, detailed DPR will be submitted after BoQ is finalized by Utilities and Budgetary offer is received from at least two vendors. The Scheme is scheduled to be implemented by December, 2022.	—	NA	Completed	—
Category II									
No Islanding Scheme under this Category									

Category of Islanding Schemes:	
Category 'A' IS	Islanding Schemes which are existing or already planned and in implementation stage.
Category 'B' IS	Islanding Schemes which are newly proposed.
Category-'I' IS	Islanding Schemes which are designed for the major cities, senstive generation or strategic loads.
Category-'II' IS	Islanding Schemes other than category I are Category II IS
Colour codes of Islanding Schemes:	
Green	Implemented/In service Islanding Scheme
Yellow	Under review/ Under Implementation Islanding Scheme
Red	Newly proposed Islanding Scheme which are under design/under implementaion stage

NA	**Not Applicable**

Annexure-V

Format for submission of status of RGMO and FGMO by SRPC

Sr. No.	Name of Generating Station	Sector(State/Centre/Pvt)	Unit No. of Generating Station	Capacity (MW) of Unit No. of Generating Station	Status of RGMO		Enable/Disable status of FGMO
					Availability of RGMO (Yes/No)	Enable/Disable status of RGMO	
1	NTPC Ramagundam	Centre	Unit I	200			Enabled
			Unit II	200			Enabled
			Unit III	200			Enabled
			Unit IV	500	Yes	Enabled	
			Unit V	500	Yes	Enabled	
			Unit VI	500	Yes	Enabled	
			Unit VII	500	Yes	Enabled	
2	NTPC Simhadri	Centre	Unit I	500	Yes	Enabled	
			Unit II	500	Yes	Enabled	
			Unit III	500	Yes	Enabled	
			Unit IV	500	Yes	Enabled	
3	NTPC Kudgi	Centre	Unit I	800	Yes	Enabled	
			Unit II	800	Yes	Enabled	
			Unit III	800	Yes	Enabled	
4	NTPC Talcher	Centre	Unit III	500	Yes	Enabled	
			Unit IV	500	Yes	Enabled	
			Unit V	500	Yes	Enabled	
			Unit VI	500	Yes	Enabled	
5	Neyveli TS II	Centre	Unit I	210			Enabled
			Unit II	210			Enabled
			Unit III	210			Enabled
			Unit IV	210	Yes	Enabled	
			Unit V	210	Yes	Enabled	
			Unit VI	210	Yes	Enabled	
			Unit VII	210	Yes	Enabled	
6	Neyveli TS I Expn	Centre	Unit I	210	Yes	Enabled	
			Unit II	210	Yes	Enabled	
7	Neyveli TS II Expn	Centre	Unit I	250	Yes	Enabled	
			Unit II	250	Yes	Enabled	
8	NNTPP	Centre	Unit I	500	Yes	Enabled	
			Unit II	500	Yes	Enabled	
9	NTECL Vallur	Centre	Unit I	500	Yes	Enabled	
			Unit II	500	Yes	Enabled	
			Unit III	500	Yes	Enabled	
10	NTPL	Centre	Unit I	500	Yes	Enabled	

			Unit II	500	Yes	Enabled	
11	TPCIL (SEIL P-I)	**ISTS conn IPP**	**Unit I**	660	Yes	Enabled	
			Unit II	660	Yes	Enabled	
12	SGPL (SEIL P-II)	**ISTS conn IPP**	**Unit I**	660	Yes	Enabled	
			Unit II	660	Yes	Enabled	
13	CEPL	**ISTS conn IPP**	**Unit I**	600	Yes	Enabled	
			Unit II	600	Yes	Enabled	
14	IL&FS	**ISTS conn IPP**	**Unit I**	600	Yes	Enabled	
			Unit II	600	Yes	Enabled	
15	Vijaywada TPS (Dr. NTTPS)	**AP**	**Unit I**	210			Enabled
			Unit II	210			Enabled
			Unit III	210	Yes	Enabled	
			Unit IV	210	Yes	Enabled	
			Unit V	210	Yes	Enabled	
			Unit VI	210	Yes	Enabled	
			Unit VII	500	Yes	Enabled	
16	Rayalseema TPS	**AP**	**Unit I**	210	Yes	Enabled	
			Unit II	210	Yes	Enabled	
			Unit III	210	Yes	Enabled	
			Unit IV	210	Yes	Enabled	
			Unit V	210	Yes	Enabled	
			Unit VI	600	Yes	Enabled	
17	SDSTPS	**AP**	**Unit I**	800	Yes	Enabled	
			Unit II	800	Yes	Enabled	
18	HNPCL	**AP IPP**	**Unit I**	520	Yes	Enabled	
			Unit II	520	Yes	Enabled	
19	Upper SIleru	**AP**	**Unit I**	60			Enabled
			Unit II	60			Enabled
			Unit III	60			Enabled
			Unit IV	60			Enabled
20	Lower Sileru	**AP**	**Unit I**	115			Enabled
			Unit II	115			Enabled
			Unit III	115			Enabled
			Unit IV	115			Enabled
21	Donkarayi	**AP**	**Unit I**	25	**Exemption**		
22	Machkund	**AP**	**Unit I**	23	**Exemption**		
			Unit II	23	**Exemption**		
			Unit III	23	**Exemption**		
			Unit IV	17	**Exemption**		
			Unit V	17	**Exemption**		
			Unit VI	17	**Exemption**		
23	N'Sagar RCPH	**AP**	**Unit I**	30	**Exemption**		

			Unit II	30	**Exemption**		
			Unit III	30	**Exemption**		
24	Srisailam RB	**AP**	**Unit I**	110	Yes	Enabled	
			Unit II	110	Yes	Enabled	
			Unit III	110	Yes	Enabled	
			Unit IV	110	Yes	Enabled	
			Unit V	110	Yes	Enabled	
			Unit VI	110	Yes	Enabled	
			Unit VII	110	Yes	Enabled	
25	PennaAhobilam	**AP**	**Unit I**	10	**Exemption**		
			Unit II	10	**Exemption**		
26	Kakatiya TPP	**TS**	**Unit I**	500	Yes	Enabled	
			Unit II	600	Yes	Enabled	
27	Kothagudem TPS	**TS**	**Unit IX**	250	Yes	Enabled	
			Unit X	250	Yes	Enabled	
			Unit XI	500	Yes	Enabled	
			Unit XII	800	Yes	Enabled	
28	Bhadradri TPS	**TS**	**Unit I**	270	Yes	Enabled	
			Unit II	270	Yes	Enabled	
			Unit III	270	Yes	Enabled	
			Unit IV	270	Yes	Enabled	
29	Singareni TPS	**TS IPP**	**Unit I**	600	Yes	Enabled	
			Unit II	600	Yes	Enabled	
30	Nagarjunasagar	**TS**	**Unit I**	110			Enabled
			Unit II	100.8			Enabled
			Unit III	100.8			Enabled
			Unit IV	100.8			Enabled
			Unit V	100.8			Enabled
			Unit VI	100.8			Enabled
			Unit VII	100.8			Enabled
			Unit VIII	100.8			Enabled
31	N'Sagar LCPH	**TS**	**Unit I**	30	**Exemption**		
			Unit II	30	**Exemption**		
32	Priyadarshini Jurala	**TS**	**Unit I**	39			Enabled

			Unit II	39			Enabled
			Unit III	39			Enabled
			Unit IV	39			Enabled
			Unit V	39			Enabled
			Unit VI	39			Enabled
33	Srisailam LB	**TS**	**Unit I**	150			Enabled
			Unit II	150			Enabled
			Unit III	150			Enabled
			Unit IV	150			Enabled
			Unit V	150			Enabled
			Unit VI	150			Enabled
34	Bellary TPS	**KA**	**Unit I**	500	Yes	Enabled	
			Unit II	500	Yes	Enabled	
			Unit III	700	Yes	Enabled	
35	Raichur TPS	**KA**	**Unit I**	210	Yes	Enabled	
			Unit II	210	Yes	Enabled	
			Unit III	210	Yes	Enabled	
			Unit IV	210	Yes	Enabled	
			Unit V	210	Yes	Enabled	
			Unit VI	210	Yes	Enabled	
			Unit VII	210	Yes	Enabled	
			Unit VIII	250	Yes	Enabled	
36	YTPS	**KA**	**Unit I**	800	Yes	Enabled	
			Unit II	800	Yes	Enabled	
37	UPCL	**KA IPP**	**Unit I**	600	Yes	Enabled	
			Unit II	600	Yes	Enabled	
38	Jindal	**KA IPP**	**Unit I**	300	Yes	Enabled	
			Unit II	300	Yes	Enabled	
			Unit III	300	Yes	Enabled	
			Unit IV	300	Yes	Enabled	
39	Almatty	**KA**	**Unit I**	15	Yes	Enabled	
			Unit II	55	Yes	Enabled	
			Unit III	55	Yes	Enabled	
			Unit IV	55	Yes	Enabled	
			Unit V	55	Yes	Enabled	
			Unit VI	55	Yes	Enabled	
40	Bhadra	**KA**	**Unit I**	12.1			Enabled
			Unit II	12.1			Enabled
41	Ghataprabha	**KA**	**Unit I**	16	Yes	Enabled	
			Unit II	16	Yes	Enabled	
42	Jog (MGHES)	**KA**	**Unit I**	21.6			Enabled

			Unit II	21.6			Enabled
			Unit III	21.6			Enabled
			Unit IV	21.6			Enabled
			Unit V	13.2			Enabled
			Unit VI	13.2			Enabled
			Unit VII	13.2			Enabled
			Unit VIII	13.2			Enabled
43	Kadra	**KA**	**Unit I**	50			Enabled
			Unit II	50			Enabled
			Unit III	50			Enabled
44	Kodasalli	**KA**	**Unit I**	40			Enabled
			Unit II	40			Enabled
			Unit III	40			Enabled
45	Linganamak ki Dam PH	**KA**	**Unit I**	28	Yes	Enabled	
			Unit II	28	Yes	Enabled	
46	Munirabad	**KA**	**Unit I**	10	Yes	Enabled	
47	Nagjari	**KA**	**Unit I**	150	Yes	Enabled	
			Unit II	150	Yes	Enabled	
			Unit III	150	Yes	Enabled	
			Unit IV	150	Yes	Enabled	
			Unit V	150			Enabled
			Unit VI	135			Enabled
48	Sharavati	**KA**	**Unit I**	103.5	Yes	Enabled	
			Unit II	103.5	Yes	Enabled	
			Unit III	103.5	Yes	Enabled	
			Unit IV	103.5	Yes	Enabled	
			Unit V	103.5	Yes	Enabled	
			Unit VI	103.5			Enabled
			Unit VII	103.5			Enabled
			Unit VIII	103.5			Enabled
			Unit IX	103.5			Enabled
			Unit X	103.5			Enabled
49	Sharavati Tail Race	**KA**	**Unit I**	60	Yes	Enabled	
			Unit II	60	Yes	Enabled	
			Unit III	60			Enabled
			Unit IV	60			Enabled
50	Supa	**KA**	**Unit I**	50			Enabled
			Unit II	50			Enabled
51	Varahi UGPH	**KA**	**Unit I**	115	Yes	Enabled	
			Unit II	115	Yes	Enabled	

			Unit III	115	Yes	Enabled	
			Unit IV	115	Yes	Enabled	
52	Iddukki	**KL**	**Unit I**	130			Enabled
			Unit II	130			Enabled
			Unit III	130			Enabled
			Unit IV	130			Enabled
			Unit V	130			Enabled
			Unit VI	130			Enabled
53	Idamalayar	**KL**	**Unit I**	38	Yes	Enabled	
			Unit II	38	Yes	Enabled	
54	Kakkad	**KL**	**Unit I**	25	LOCKED		
			Unit II	25	LOCKED		
55	Kuttiyadi	**KL**	**Unit I**	25	LOCKED		
			Unit II	25	LOCKED		
			Unit III	25	LOCKED		
56	Kuttiyadi Extension	**KL**	**Unit I**	50			Enabled
57	Kuttiadi Addl Extn	**KL**	**Unit I**	50			Enabled
			Unit II	50			Enabled
58	Lower Periyar	**KL**	**Unit I**	60			Enabled
			Unit II	60			Enabled
			Unit III	60			Enabled
59	Neriamangalam	**KL**	**Unit I**	18			Enabled
			Unit II	18			Enabled
			Unit III	18			Enabled
60	NES	**KL**	**Unit I**	25			Enabled
61	Panniar	**KL**	**Unit I**	15			Enabled
			Unit II	15			Enabled
62	Poringalkuthu LBE	**KL**	**Unit I**	16	LOCKED		
63	Sabarigiri	**KL**	**Unit I**	55	LOCKED		
			Unit II	55	LOCKED		
			Unit III	55	LOCKED		
			Unit IV	60			Enabled
			Unit V	55	LOCKED		
			Unit VI	60	LOCKED		
64	Sengulam	**KL**	**Unit I**	12	LOCKED		
			Unit II	12	LOCKED		
			Unit III	12	LOCKED		

			Unit IV	12	LOCKED		
65	Sholayar	**KL**	**Unit I**	18			Enabled
			Unit II	18			Enabled
			Unit III	18			Enabled
66	Mettur TPS	**TN**	**Unit I**	210			Enabled
			Unit II	210			Enabled
			Unit III	210			Enabled
			Unit IV	210			Enabled
67	METTUR ST3	**TN**	**Unit I**	600	Yes	Enabled	
68	North Chennai TPS	**TN**	**Unit I**	210	Yes	Enabled	
			Unit II	210	Yes	Enabled	
			Unit III	210	Yes	Enabled	
69	NCTPS ST2	**TN**	**Unit I**	600	Yes	Enabled	
			Unit II	600	Yes	Enabled	
70	Tuticorin	**TN**	**Unit I**	210			Enabled
			Unit II	210			Enabled
			Unit III	210			Enabled
			Unit IV	210	Yes	Enabled	
			Unit V	210	Yes	Enabled	
71	STCMS	**TN IPP**	**Unit I**	250	Yes	Enabled	
72	SEPC	**TN IPP**	**Unit I**	525	Yes	Enabled	
73	Aliyar	**TN**	**Unit I**	60	Yes	Enabled	
74	Bhavani	**TN**	**Unit I**	15			Enabled
			Unit II	15			Enabled
75	Kadamparai	**TN**	**Unit I**	100			Enabled
			Unit II	100			Enabled
			Unit III	100			Enabled
			Unit IV	100			Enabled
76	Kodayar I	**TN**	**Unit I**	60	Yes	Enabled	
			Unit II	40	Yes	Enabled	
77	Kundah I	**TN**	**Unit I**	20	Yes	Enabled	
			Unit II	20	Yes	Enabled	
			Unit III	20	Yes	Enabled	
78	Kundah II	**TN**	**Unit I**	35	Yes	Enabled	
			Unit II	35	Yes	Enabled	
			Unit III	35	Yes	Enabled	
			Unit IV	35	Yes	Enabled	
			Unit V	35	Yes	Enabled	
79	Kundah III	**TN**	**Unit I**	60	Yes	Enabled	
			Unit II	60	Yes	Enabled	
			Unit III	60	Yes	Enabled	
80	Kundah IV	**TN**	**Unit I**	50	Yes	Enabled	

			Unit II	50	Yes	Enabled	
81	Kundah V	**TN**	**Unit I**	20	Yes	Enabled	
			Unit II	20	Yes	Enabled	
82	Kundah VI	**TN**	**Unit I**	30	Yes	Enabled	
83	Lower Mettur HEP I	**TN**	**Unit I**	15			Enabled
			Unit II	15			Enabled
84	Lower Mettur HEP II	**TN**	**Unit I**	15			Enabled
			Unit II	15			Enabled
85	Lower Mettur HEP III	**TN**	**Unit I**	15			Enabled
			Unit II	15			Enabled
86	Lower Mettur HEP IV	**TN**	**Unit I**	15			Enabled
			Unit II	15			Enabled
87	Mettur Dam	**TN**	**Unit I**	10			Enabled
			Unit II	10			Enabled
			Unit III	10			Enabled
			Unit IV	10			Enabled
88	Mettur Tunnel	**TN**	**Unit I**	50			Enabled
			Unit II	50			Enabled
			Unit III	50			Enabled
			Unit IV	50			Enabled
89	Moyar	**TN**	**Unit I**	12	Yes	Enabled	
			Unit II	12	Yes	Enabled	
			Unit III	12	Yes	Enabled	
90	Parson's valley	**TN**	**Unit I**	30			Enabled
91	Periyar	**TN**	**Unit I**	35	Yes	Enabled	
			Unit II	35	Yes	Enabled	
			Unit III	35	Yes	Enabled	
			Unit IV	35			Enabled
92	PUSHEP	**TN**	**Unit I**	50	Yes	Enabled	
			Unit II	50	Yes	Enabled	
			Unit III	50	Yes	Enabled	
93	Pykara	**TN**	**Unit I**	11	Yes	Enabled	
			Unit II	14	Yes	Enabled	
			Unit III	14	Yes	Enabled	
94	Sarkarpathy	**TN**	**Unit I**	30			Enabled
95	Servalar	**TN**	**Unit I**	20			Enabled

96	Sholayar I	**TN**	**Unit I**	35			Enabled
			Unit II	35			Enabled
			Unit III	25			Enabled
97	Suruliyar	**TN**	**Unit I**	35	Yes	Enabled	

Relevant IEGC regulation:

1. Regulation 5.2 (f):

All thermal generating units of 200 MW and above and all hydro units of 10 MW and above, which are synchronized with the grid, irrespective of their ownership, shall have their governors in operation at all times in accordance with the following provisions:

Governor Action

i) Following Thermal and hydro (except those with upto three hours pondage) generating units shall be operated under restricted governor mode of operation with effect from the date given below:

a) Thermal generating units of 200 MW and above,

1) Software based Electro Hydraulic Governor (EHG) system : 01.08.2010

2) Hardware based EHG system : 01.08.2010

b) Hydro units of 10 MW and above : 01.08.2010

2. First amendment to IEGC, 2010

After clause (iii) of sub-regulation (f) of Regulation 5.2 of Principal Regulations, following proviso shall be inserted.

"Provided that if a generating unit cannot be operated under restricted governor mode operation, then it shall be operated in free governor mode operation with manual intervention to operate in the manner required under restricted governor mode operation."

Status of RGMO and FGMO by WRPC

Sr. No.	Name of Generating Station	Sector (State/Centre/ Pvt)	Unit No. of Generating Station	Capacity (MW) of Unit No. of Generating Station	Status of RGMO		Enable/Disable status of FGMO
					Availability of RGMO (Yes/No)	Enable/Disable status of RGMO	
1	Gadarwara	Central	1	800	Yes	Enable	
2	Gadarwara	Central	2	800	Yes	Enable	
3	Gandhar	Central	GT1	144.3	Yes	No	Enable
4	Gandhar	Central	GT2	144.3	Yes	No	Enable
5	Gandhar	Central	GT3	144.3	Yes	No	Enable
6	Gandhar	Central	ST	224.5	Yes	NA. ST loading/unloading is dependent of GT/WHRB	
7	Kawas	Central	GT 1A	106	No	No	Enable

Sr. No.	Name of Generating Station	Sector (State/Centre/ Pvt)	Unit No. of Generating Station	Capacity (MW) of Unit No. of Generating Station	Status of RGMO		Enable/Disable status of FGMO
8	Kawas	Central	GT 1B	106	No	No	Enable
9	Kawas	Central	GT 2A	106	No	No	Enable
10	Kawas	Central	GT 2B	106	No	No	Enable
11	Kawas	Central	ST 1C	116	No	No	Enable
12	Kawas	Central	ST 2C	116	No	No	Enable
13	Khargone	Central	1	660	Yes	Enable	
14	Khargone	Central	2	660	Yes	Enable	
15	Korba STPS	Central	1	200	Yes	Enable	
16	Korba STPS	Central	2	200	Yes	Enable	
17	Korba STPS	Central	3	200	Yes	Enable	

Sr. No.	Name of Generating Station	Sector (State/Centre/ Pvt)	Unit No. of Generating Station	Capacity (MW) of Unit No. of Generating Station	Status of RGMO		Enable/Disable status of FGMO
18	Korba STPS	Central	4	500	Yes	Enable	
19	Korba STPS	Central	5	500	Yes	Enable	
20	Korba STPS	Central	6	500	Yes	Enable	
21	Korba STPS	Central	7	500	Yes	Enable	
22	LARA	Central	1	800	Yes	Enable	
23	LARA	Central	2	800	Yes	Enable	
24	Mouda	Central	1	500	Yes	Enable	
25	Mouda	Central	2	500	Yes	Enable	
26	Mouda	Central	3	660	Yes	Enable	
27	Mouda	Central	4	660	Yes	Enable	

Sr. No.	Name of Generating Station	Sector (State/Centre/ Pvt)	Unit No. of Generating Station	Capacity (MW) of Unit No. of Generating Station	Status of RGMO		Enable/Disable status of FGMO
28	NSPCL	Central	1	250	Yes	Enable	
29	NSPCL	Central	2	250	Yes	Enable	
30	Ratnagiri Phase I	Central	1	205			Enable
31	Ratnagiri Phase I	Central	2	205			Enable
32	Ratnagiri Phase I	Central	3	230			Enable
33	Ratnagiri Phase II	Central	1	213			Enable
34	Ratnagiri Phase II	Central	2	213			Enable
35	Ratnagiri Phase II	Central	3	237.54			Enable
36		Central	1	213			Enable

Sr. No.	Name of Generating Station	Sector (State/Centre/ Pvt)	Unit No. of Generating Station	Capacity (MW) of Unit No. of Generating Station	Status of RGMO		Enable/Disable status of FGMO
	Ratnagiri Phase III						
37	Ratnagiri Phase III	Central	2	213			Enable
38	Ratnagiri Phase III	Central	3	237.55			Enable
39	Sipat-I	Central	1	660	Yes	Enable	
40	Sipat-I	Central	2	660	Yes	Enable	
41	Sipat-I	Central	3	660	Yes	Enable	
42	Sipat-II	Central	4	500	Yes	Enable	
43	Sipat-II	Central	5	500	Yes	Enable	
44	Solapur	Central	1	660	Yes	Enable	

Sr. No.	Name of Generating Station	Sector (State/Centre/ Pvt)	Unit No. of Generating Station	Capacity (MW) of Unit No. of Generating Station	Status of RGMO		Enable/Disable status of FGMO
45	Solapur	Central	2	660	Yes	Enable	
46	SSP CHPH (Hy)	Central	1	50	Yes	Enable	
47	SSP CHPH (Hy)	Central	2	50	Yes	Enable	
48	SSP CHPH (Hy)	Central	3	50	Yes	Enable	
49	SSP CHPH (Hy)	Central	4	50	Yes	Enable	
50	SSP CHPH (Hy)	Central	5	50	Yes	Enable	
51	SSP RBPH (Hy)^	Central	1	200	Yes	Enable	
52	SSP RBPH (Hy)^	Central	2	200	Yes	Enable	

Sr. No.	Name of Generating Station	Sector (State/Centre/ Pvt)	Unit No. of Generating Station	Capacity (MW) of Unit No. of Generating Station	Status of RGMO		Enable/Disable status of FGMO
53	SSP RBPH (Hy)^	Central	3	200	Yes	Enable	
54	SSP RBPH (Hy)^	Central	4	200	Yes	Enable	
55	SSP RBPH (Hy)^	Central	5	200	Yes	Enable	
56	SSP RBPH (Hy)^	Central	6	200	Yes	Enable	
57	Vindhyachal-I	Central	1	210	Yes	Enable	
58	Vindhyachal-I	Central	2	210	Yes	Enable	
59	Vindhyachal-I	Central	3	210	Yes	Enable	
60	Vindhyachal-I	Central	4	210	Yes	Enable	

Sr. No.	Name of Generating Station	Sector (State/Centre/ Pvt)	Unit No. of Generating Station	Capacity (MW) of Unit No. of Generating Station	Status of RGMO		Enable/Disable status of FGMO
61	Vindhyachal-I	Central	5	210	Yes	Enable	
62	Vindhyachal-I	Central	6	210	Yes	Enable	
63	Vindhyachal-II	Central	7	500	Yes	**No** **(EHG Hunting, Expected to be resolved tentatively by 15th July-2022)**	
64	Vindhyachal-II	Central	8	500	Yes	Enable	
65	Vindhyachal-III	Central	9	500	Yes	Enable	
66	Vindhyachal-III	Central	10	500	Yes	Enable	
67	Vindhyachal-IV	Central	11	500	Yes	Enable	

Sr. No.	Name of Generating Station	Sector (State/Centre/ Pvt)	Unit No. of Generating Station	Capacity (MW) of Unit No. of Generating Station	Status of RGMO		Enable/Disable status of FGMO
68	Vindhyachal-IV	Central	12	500	Yes	Enable	
69	Vindhyachal-V	Central	13	500	Yes	Enable	
70	Balco	Private	1	300	Yes	Enable	
71	Balco	Private	2	300	Yes	Enable	
72	Balco	Private	3	300	Yes	Enable	
73	Balco	Private	4	300	Yes	Enable	
74	CGPL	Private	10	830	Yes	Enable	
75	CGPL	Private	20	830	Yes	Enable	

Sr. No.	Name of Generating Station	Sector (State/Centre/ Pvt)	Unit No. of Generating Station	Capacity (MW) of Unit No. of Generating Station	Status of RGMO		Enable/Disable status of FGMO
76	CGPL	Private	30	830	Yes	Enable	
77	CGPL	Private	40	830	Yes	Enable	
78	CGPL	Private	50	830	Yes	Enable	
79	DB Power	Private	1	600	Yes	Enable	
80	DB Power	Private	2	600	Yes	Enable	
81	Dhariwal	Private	2	300	Yes	Enable	
82	Mahan_Energen	Private	1	600	Yes	Enable	
83	Mahan_Energen	Private	2	600	Yes	Enable	

Sr. No.	Name of Generating Station	Sector (State/Centre/ Pvt)	Unit No. of Generating Station	Capacity (MW) of Unit No. of Generating Station	Status of RGMO		Enable/Disable status of FGMO
84	GMR Warora (GWEL)	Private	1	300	Yes	Enable	
85	GMR Warora (GWEL)	Private	2	300	Yes	Enable	
86	RPREL	Private	1	685	Yes	Enable	
87	RPREL	Private	2	685	Yes	Enable	
88	Jhabua	Private	1	600	Yes	Enable	
89	Jindal Stage-I	Private	1	250	Yes	Enable	
90	Jindal Stage-I	Private	2	250	Yes	Enable	
91		Private	3	250	Yes	Enable	

Sr. No.	Name of Generating Station	Sector (State/Centre/ Pvt)	Unit No. of Generating Station	Capacity (MW) of Unit No. of Generating Station	Status of RGMO		Enable/Disable status of FGMO
	Jindal Stage-I						
92	Jindal Stage-I	Private	4	250	Yes	Enable	
93	Jindal Stage-II	Private	1	600	Yes	Enable	
94	Jindal Stage-II	Private	2	600	Yes	Enable	
95	Jindal Stage-II	Private	3	600	Yes	Enable	
96	Jindal Stage-II	Private	4	600	Yes	Enable	
97	JP-Nigrie	Private	1	660	Yes	Enable	
98	JP-Nigrie	Private	2	660	Yes	Enable	
99		Private	1	600	Yes	Enable	

Sr. No.	Name of Generating Station	Sector (State/Centre/ Pvt)	Unit No. of Generating Station	Capacity (MW) of Unit No. of Generating Station	Status of RGMO		Enable/Disable status of FGMO
	KSK Mahanadi						
100	KSK Mahanadi	Private	2	600	Yes	Enable	
101	KSK Mahanadi	Private	3	600	Yes	Enable	
102	REGL	Private	1	600	Yes	Enable	
103	Lanco	Private	1	300	Yes	Enable	
104	Lanco	Private	2	300	Yes	Enable	
105	MB-Power	Private	1	600	Yes	Enable	
106	MB-Power	Private	2	600	Yes	Enable	
107		Private	1	300	Yes	Enable	

Sr. No.	Name of Generating Station	Sector (State/Centre/ Pvt)	Unit No. of Generating Station	Capacity (MW) of Unit No. of Generating Station	Status of RGMO		Enable/Disable status of FGMO
	MCCPL						
108	RKM	Private	1	360	Yes	Enable	
109	RKM	Private	2	360	Yes	Enable	
110	RKM	Private	3	360	Yes	Enable	
111	RKM	Private	4	360	Yes	Enable	
112	Sasan_UMPP	Private	1	660	Yes	Enable	
113	Sasan_UMPP	Private	2	660	Yes	Enable	
114	Sasan_UMPP	Private	3	660	Yes	Enable	
115		Private	4	660	Yes	Enable	

Sr. No.	Name of Generating Station	Sector (State/Centre/ Pvt)	Unit No. of Generating Station	Capacity (MW) of Unit No. of Generating Station	Status of RGMO		Enable/Disable status of FGMO
	Sasan_UMPP						
116	Sasan_UMPP	Private	5	660	Yes	Enable	
117	Sasan_UMPP	Private	6	660	Yes	Enable	
118	SKS	Private	1	300	Yes	Enable	
119	SKS	Private	2	300	Yes	Enable	
120	TRN	Private	1	300	Yes	**Disable** **TRN remark:** Unit#1 is running on May'2022 after a long shutdown. Now the Unit#1 is	

Sr. No.	Name of Generating Station	Sector (State/Centre/ Pvt)	Unit No. of Generating Station	Capacity (MW) of Unit No. of Generating Station	Status of RGMO		Enable/Disable status of FGMO
						running in indifferent load condition due to coal shortage / poor coal quality/Frequent back down from UPPCL. However, once the situation is improved we shall be putting the RGMO in service	
121	TRN	Private	2	300	Yes	**Disable** **TRN remark:** Unit#2 is in under shutdown condition since last 16	

Sr. No.	Name of Generating Station	Sector (State/Centre/ Pvt)	Unit No. of Generating Station	Capacity (MW) of Unit No. of Generating Station	Status of RGMO		Enable/Disable status of FGMO
						months so, the RGMO is in Disable condition	

Status of RGMO/FGMO of NR

Station	Owned by	Sector	Unit No.	Fuel Type	Installed Capacity (MW)	Geographical Location (State)	Availability of RGMO (Yes/No)	Enable/Disable status of RGMO	Enable/Disable status of FGMO	Remarks
Anta GPS	NTPC	Central	GT#1	Gas	88.71	Rajasthan	Yes	Enable	Not Applicable	
Anta GPS	NTPC	Central	GT#2	Gas	88.71	Rajasthan	Yes	Enable	Not Applicable	
Anta GPS	NTPC	Central	GT#3	Gas	88.71	Rajasthan	Yes	Enable	Not Applicable	
Auraiya GPS	NTPC	Central	GT#1	Gas	111.19	Uttar Pradesh	No	Not Available	Enable	
Auraiya GPS	NTPC	Central	GT#2	Gas	111.19	Uttar Pradesh	No	Not Available	Enable	
Auraiya GPS	NTPC	Central	GT#3	Gas	111.19	Uttar Pradesh	No	Not Available	Enable	
Auraiya GPS	NTPC	Central	GT#4	Gas	111.19	Uttar Pradesh	No	Not Available	Enable	
Dadri NTPC	NTPC	Central	1	Thermal	210	Delhi-NCR	Yes	Enable	Not Applicable	
Dadri NTPC	NTPC	Central	2	Thermal	210	Delhi-NCR	Yes	Enable	Not Applicable	
Dadri NTPC	NTPC	Central	3	Thermal	210	Delhi-NCR	Yes	Enable	Not Applicable	
Dadri NTPC	NTPC	Central	4	Thermal	210	Delhi-NCR	Yes	Enable	Not Applicable	
Dadri NTPC	NTPC	Central	1	Thermal	490	Delhi-NCR	Yes	Enable	Not Applicable	
Dadri NTPC	NTPC	Central	2	Thermal	490	Delhi-NCR	Yes	Enable	Not Applicable	
Dadri GPS	NTPC	Central	GT#1	Gas	130.19	Delhi-NCR	Yes	Enable	Not Applicable	
Dadri GPS	NTPC	Central	GT#2	Gas	130.19	Delhi-NCR	Yes	Enable	Not Applicable	
Dadri GPS	NTPC	Central	GT#3	Gas	130.19	Delhi-NCR	Yes	Enable	Not Applicable	
Dadri GPS	NTPC	Central	GT#4	Gas	130.19	Delhi-NCR	Yes	Enable	Not Applicable	
Koldam	NTPC	Central	1	Hydro	200	Himachal Pradesh	Yes	Enable	Not Applicable	
Koldam	NTPC	Central	2	Hydro	200	Himachal Pradesh	Yes	Enable	Not Applicable	
Koldam	NTPC	Central	3	Hydro	200	Himachal Pradesh	Yes	Enable	Not Applicable	
Koldam	NTPC	Central	4	Hydro	200	Himachal Pradesh	Yes	Enable	Not Applicable	
Rihand TPS	NTPC	Central	1	Thermal	500	Uttar Pradesh	Yes	Enable	Not Applicable	
Rihand TPS	NTPC	Central	2	Thermal	500	Uttar Pradesh	Yes	Enable	Not Applicable	
Rihand TPS	NTPC	Central	3	Thermal	500	Uttar Pradesh	Yes	Enable	Not Applicable	
Rihand TPS	NTPC	Central	4	Thermal	500	Uttar Pradesh	Yes	Enable	Not Applicable	
Rihand TPS	NTPC	Central	5	Thermal	500	Uttar Pradesh	Yes	Enable	Not Applicable	
Rihand TPS	NTPC	Central	6	Thermal	500	Uttar Pradesh	Yes	Enable	Not Applicable	
Singrauli STPS	NTPC	Central	1	Thermal	200	Uttar Pradesh	Yes	Enable	Not Applicable	
Singrauli STPS	NTPC	Central	2	Thermal	200	Uttar Pradesh	Yes	Enable	Not Applicable	
Singrauli STPS	NTPC	Central	3	Thermal	200	Uttar Pradesh	Yes	Enable	Not Applicable	
Singrauli STPS	NTPC	Central	4	Thermal	200	Uttar Pradesh	Yes	Enable	Not Applicable	
Singrauli STPS	NTPC	Central	5	Thermal	200	Uttar Pradesh	Yes	Enable	Not Applicable	
Singrauli STPS	NTPC	Central	6	Thermal	500	Uttar Pradesh	Yes	Enable	Not Applicable	
Singrauli STPS	NTPC	Central	7	Thermal	500	Uttar Pradesh	Yes	Enable	Not Applicable	
Tanda TPS Stage-II	NTPC	Central	1	Thermal	660	Uttar Pradesh	Yes	Enable	Not Applicable	
Tanda TPS Stage-II	NTPC	Central	2	Thermal	660	Uttar Pradesh	Yes	Enable	Not Applicable	
Unchahar-I, II & II TPS	NTPC	Central	1	Thermal	210	Uttar Pradesh	Yes	Enable	Not Applicable	
Unchahar-I, II & II TPS	NTPC	Central	2	Thermal	210	Uttar Pradesh	Yes	Enable	Not Applicable	
Unchahar-I, II & II TPS	NTPC	Central	1	Thermal	210	Uttar Pradesh	Yes	Enable	Not Applicable	
Unchahar-I, II & II TPS	NTPC	Central	2	Thermal	210	Uttar Pradesh	Yes	Enable	Not Applicable	
Unchahar-I, II & II TPS	NTPC	Central	1	Thermal	210	Uttar Pradesh	Yes	Enable	Not Applicable	
Unchahar-IV	NTPC	Central	1	Thermal	500	Uttar Pradesh	Yes	Enable	Not Applicable	
Bairasiul	NHPC	Central	1	Hydro	60	Himachal Pradesh	No	Not Applicable	Enable	As reported , RGMO is not applicable as per IEGC clause 5.2 (f), 5.2 (g), 5.2 (h) and ,5.2(i)
Bairasiul	NHPC	Central	2	Hydro	60	Himachal Pradesh	No	Not Applicable	Enable	As reported , RGMO is not applicable as per IEGC clause 5.2 (f), 5.2 (g), 5.2 (h) and ,5.2(i)
Bairasiul	NHPC	Central	3	Hydro	60	Himachal Pradesh	No	Not Applicable	Enable	As reported , RGMO is not applicable as per IEGC clause 5.2 (f), 5.2 (g), 5.2 (h) and ,5.2(i)
Chamera HPS-I	NHPC	Central	1	Hydro	180	Himachal Pradesh	Yes	Enable	Not Applicable	
Chamera HPS-I	NHPC	Central	2	Hydro	180	Himachal Pradesh	Yes	Enable	Not Applicable	
Chamera HPS-I	NHPC	Central	3	Hydro	180	Himachal Pradesh	Yes	Enable	Not Applicable	
Chamera HPS-II	NHPC	Central	1	Hydro	100	Himachal Pradesh	No	Not Applicable	Enable	As reported , RGMO is not applicable as per IEGC clause 5.2 (f), 5.2 (g), 5.2 (h) and ,5.2(i)
Chamera HPS-II	NHPC	Central	2	Hydro	100	Himachal Pradesh	No	Not Applicable	Enable	As reported , RGMO is not applicable as per IEGC clause 5.2 (f), 5.2 (g), 5.2 (h) and ,5.2(i)
Chamera HPS-II	NHPC	Central	3	Hydro	100	Himachal Pradesh	No	Not Applicable	Enable	As reported , RGMO is not applicable as per IEGC clause 5.2 (f), 5.2 (g), 5.2 (h) and ,5.2(i)
Chamera HPS-III	NHPC	Central	1	Hydro	77	Himachal Pradesh	Yes	Enable	Not Applicable	

Chamera HPS-III	NHPC	Central	2	Hydro	77	Himachal Pradesh	Yes	Enable	Not Applicable	
Chamera HPS-III	NHPC	Central	3	Hydro	77	Himachal Pradesh	Yes	Enable	Not Applicable	
Dhauliganga	NHPC	Central	1	Hydro	70	Uttarakhand	Yes	Enable	Not Applicable	
Dhauliganga	NHPC	Central	2	Hydro	70	Uttarakhand	Yes	Enable	Not Applicable	
Dhauliganga	NHPC	Central	3	Hydro	70	Uttarakhand	Yes	Enable	Not Applicable	
Dhauliganga	NHPC	Central	4	Hydro	70	Uttarakhand	Yes	Enable	Not Applicable	
Dulhasti	NHPC	Central	1	Hydro	130	Jammu & Kashmir	No	Not Applicable	Enable	As reported , RGMO is not applicable as per IEGC clause 5.2 (f), 5.2 (g), 5.2 (h) and ,5.2(i)
Dulhasti	NHPC	Central	2	Hydro	130	Jammu & Kashmir	No	Not Applicable	Enable	As reported , RGMO is not applicable as per IEGC clause 5.2 (f), 5.2 (g), 5.2 (h) and ,5.2(i)
Dulhasti	NHPC	Central	3	Hydro	130	Jammu & Kashmir	No	Not Applicable	Enable	As reported , RGMO is not applicable as per IEGC clause 5.2 (f), 5.2 (g), 5.2 (h) and ,5.2(i)
Kishenganga	NHPC	Central	1	Hydro	110	Jammu & Kashmir	No	Not Applicable	Enable	As reported , RGMO is not applicable as per IEGC clause 5.2 (f), 5.2 (g), 5.2 (h) and ,5.2(i)
Kishenganga	NHPC	Central	2	Hydro	110	Jammu & Kashmir	No	Not Applicable	Enable	As reported , RGMO is not applicable as per IEGC clause 5.2 (f), 5.2 (g), 5.2 (h) and ,5.2(i)
Kishenganga	NHPC	Central	3	Hydro	110	Jammu & Kashmir	No	Not Applicable	Enable	As reported , RGMO is not applicable as per IEGC clause 5.2 (f), 5.2 (g), 5.2 (h) and ,5.2(i)
Parbati-3	NHPC	Central	1	Hydro	130	Himachal Pradesh	No	Not Applicable	Enable	As reported , RGMO is not applicable as per IEGC clause 5.2 (f), 5.2 (g), 5.2 (h) and ,5.2(i)
Parbati-3	NHPC	Central	2	Hydro	130	Himachal Pradesh	No	Not Applicable	Enable	As reported , RGMO is not applicable as per IEGC clause 5.2 (f), 5.2 (g), 5.2 (h) and ,5.2(i)
Parbati-3	NHPC	Central	3	Hydro	130	Himachal Pradesh	No	Not Applicable	Enable	As reported , RGMO is not applicable as per IEGC clause 5.2 (f), 5.2 (g), 5.2 (h) and ,5.2(i)
Parbati-3	NHPC	Central	4	Hydro	130	Himachal Pradesh	No	Not Applicable	Enable	As reported , RGMO is not applicable as per IEGC clause 5.2 (f), 5.2 (g), 5.2 (h) and ,5.2(i)
Salal Stage-I & II	NHPC	Central	1	Hydro	115	Jammu & Kashmir	No	Not Applicable	Enable	As reported , RGMO is not applicable as per IEGC clause 5.2 (f), 5.2 (g), 5.2 (h) and ,5.2(i)
Salal Stage-I & II	NHPC	Central	2	Hydro	115	Himachal Pradesh	No	Not Applicable	Enable	As reported , RGMO is not applicable as per IEGC clause 5.2 (f), 5.2 (g), 5.2 (h) and ,5.2(i)
Salal Stage-I & II	NHPC	Central	3	Hydro	115	Himachal Pradesh	No	Not Applicable	Enable	As reported , RGMO is not applicable as per IEGC clause 5.2 (f), 5.2 (g), 5.2 (h) and ,5.2(i)
Salal Stage-I & II	NHPC	Central	1	Hydro	115	Jammu & Kashmir	No	Not Applicable	Enable	As reported , RGMO is not applicable as per IEGC clause 5.2 (f), 5.2 (g), 5.2 (h) and ,5.2(i)
Salal Stage-I & II	NHPC	Central	2	Hydro	115	Himachal Pradesh	No	Not Applicable	Enable	As reported , RGMO is not applicable as per IEGC clause 5.2 (f), 5.2 (g), 5.2 (h) and ,5.2(i)
Salal Stage-I & II	NHPC	Central	3	Hydro	115	Himachal Pradesh	No	Not Applicable	Enable	As reported , RGMO is not applicable as per IEGC clause 5.2 (f), 5.2 (g), 5.2 (h) and ,5.2(i)
Sewa-II	NHPC	Central	1	Hydro	40	Jammu & Kashmir	Yes	Enable	Not Applicable	
Sewa-II	NHPC	Central	2	Hydro	40	Jammu & Kashmir	Yes	Enable	Not Applicable	
Sewa-II	NHPC	Central	3	Hydro	40	Jammu & Kashmir	Yes	Enable	Not Applicable	
Jhajjar (IGSTPS)	APCPL	Central	1	Thermal	500	Haryana	Yes	Enable	Not Applicable	
Jhajjar (IGSTPS)	APCPL	Central	2	Thermal	500	Haryana	Yes	Enable	Not Applicable	
Jhajjar (IGSTPS)	APCPL	Central	3	Thermal	500	Haryana	Yes	Enable	Not Applicable	
Bhakra (L)	BBMB	Central	1	Hydro	126	Punjab	Yes	Enable	Not Applicable	
Bhakra (L)	BBMB	Central	2	Hydro	126	Punjab	Yes	Enable	Not Applicable	
Bhakra (L)	BBMB	Central	3	Hydro	126	Punjab	Yes	Enable	Not Applicable	
Bhakra (L)	BBMB	Central	4	Hydro	126	Punjab	Yes	Enable	Not Applicable	
Bhakra (L)	BBMB	Central	5	Hydro	108	Punjab	Yes	Enable	Not Applicable	
Bhakra (R)	BBMB	Central	1	Hydro	157	Punjab	Yes	Enable	Not Applicable	
Bhakra (R)	BBMB	Central	2	Hydro	157	Punjab	Yes	Enable	Not Applicable	
Bhakra (R)	BBMB	Central	3	Hydro	157	Punjab	Yes	Enable	Not Applicable	
Bhakra (R)	BBMB	Central	4	Hydro	157	Punjab	Yes	Enable	Not Applicable	
Bhakra (R)	BBMB	Central	5	Hydro	157	Punjab	Yes	Enable	Not Applicable	
Dehar	BBMB	Central	1	Hydro	165	Himachal Pradesh	Yes	Disable	Disable	Software updation and RGMO enabling required.
Dehar	BBMB	Central	2	Hydro	165	Himachal Pradesh	Yes	Disable	Disable	Software updation and RGMO enabling required.
Dehar	BBMB	Central	3	Hydro	165	Himachal Pradesh	Yes	Disable	Disable	Software updation and RGMO enabling required.
Dehar	BBMB	Central	4	Hydro	165	Himachal Pradesh	Yes	Disable	Disable	Software updation and RGMO enabling required.
Dehar	BBMB	Central	5	Hydro	165	Himachal Pradesh	Yes	Disable	Disable	Software updation and RGMO enabling required.
Dehar	BBMB	Central	6	Hydro	165	Himachal Pradesh	Yes	Disable	Disable	Software updation and RGMO enabling required.
Pong	BBMB	Central	1	Hydro	66	Punjab	No	Not Available	Disable	
Pong	BBMB	Central	2	Hydro	66	Punjab	Yes	Disable	Disable	
Pong	BBMB	Central	3	Hydro	66	Punjab	Yes	Disable	Disable	
Pong	BBMB	Central	4	Hydro	66	Punjab	No	Not Available	Disable	

Pong	BBMB	Central	5	Hydro	66	Punjab	No	Not Available	Disable	
Pong	BBMB	Central	6	Hydro	66	Punjab	No	Not Available	Disable	
Tehri	THDC	Central	1	Hydro	250	Uttarakhand	Yes	Enable	Not Applicable	
Tehri	THDC	Central	2	Hydro	250	Uttarakhand	Yes	Enable	Not Applicable	
Tehri	THDC	Central	3	Hydro	250	Uttarakhand	Yes	Enable	Not Applicable	
Tehri	THDC	Central	4	Hydro	250	Uttarakhand	Yes	Enable	Not Applicable	
Koteshwar	THDC	Central	1	Hydro	100	Uttarakhand	Yes	Enable	Not Applicable	
Koteshwar	THDC	Central	2	Hydro	100	Uttarakhand	Yes	Enable	Not Applicable	
Koteshwar	THDC	Central	3	Hydro	100	Uttarakhand	Yes	Enable	Not Applicable	
Koteshwar	THDC	Central	4	Hydro	100	Uttarakhand	Yes	Enable	Not Applicable	
Nathpa-Jhakri	SJVNL	Central	1	Hydro	250	Himachal Pradesh	No	Not Available	Enable	
Nathpa-Jhakri	SJVNL	Central	2	Hydro	250	Himachal Pradesh	No	Not Available	Enable	
Nathpa-Jhakri	SJVNL	Central	3	Hydro	250	Himachal Pradesh	No	Not Available	Enable	
Nathpa-Jhakri	SJVNL	Central	4	Hydro	250	Himachal Pradesh	No	Not Available	Enable	
Nathpa-Jhakri	SJVNL	Central	5	Hydro	250	Himachal Pradesh	No	Not Available	Enable	
Nathpa-Jhakri	SJVNL	Central	6	Hydro	250	Himachal Pradesh	No	Not Available	Enable	
AD Hydro	AD Hydro	IPP	1	Hydro	96	Himachal Pradesh	Yes	Enable	Not Applicable	
AD Hydro	AD Hydro	IPP	2	Hydro	96	Himachal Pradesh	Yes	Enable	Not Applicable	
Karcham Wangtoo	JSW Energy	IPP	1	Hydro	250	Himachal Pradesh	Yes	Enable	Not Applicable	
Karcham Wangtoo	JSW Energy	IPP	2	Hydro	250	Himachal Pradesh	Yes	Enable	Not Applicable	
Karcham Wangtoo	JSW Energy	IPP	3	Hydro	250	Himachal Pradesh	Yes	Enable	Not Applicable	
Karcham Wangtoo	JSW Energy	IPP	4	Hydro	250	Himachal Pradesh	Yes	Enable	Not Applicable	
Budhil	Greenko	IPP	1	Hydro	35	Himachal Pradesh	Yes	Enable	Disable	
Budhil	Greenko	IPP	2	Hydro	35	Himachal Pradesh	Yes	Enable	Disable	
Pragati Gas Turbines	Delhi	State	GT#1	Gas	104.6	Delhi-NCR	Yes	Enable	Not Applicable	
Pragati Gas Turbines	Delhi	State	GT#2	Gas	104.6	Delhi-NCR	Yes	Enable	Not Applicable	
Bawana CCGT	Delhi	State	GT#1	Gas	216	Delhi-NCR	Yes	Enable	Enable	
Bawana CCGT	Delhi	State	GT#2	Gas	216	Delhi-NCR	Yes	Enable	Enable	
Bawana CCGT	Delhi	State	GT#3	Gas	216	Delhi-NCR	Yes	Enable	Enable	
Bawana CCGT	Delhi	State	GT#4	Gas	216	Delhi-NCR	Yes	Enable	Enable	
Bawana CCGT	Delhi	State	ST#1	Gas	253.6	Delhi-NCR	No	Not Available	Enable	
Bawana CCGT	Delhi	State	ST#2	Gas	253.6	Delhi-NCR	No	Not Available	Enable	
Panipat-I & II	Haryana	State	2	Thermal	210	Haryana	Yes	Disable	Not Applicable	Presently RGMO is not in service, as due to weak boiler conditions and other plant constraints Unit-6 has to be run on MTP load with vide valve open.
Panipat-I & II	Haryana	State	3	Thermal	250	Haryana	Yes	Enable	Not Applicable	
Panipat-I & II	Haryana	State	4	Thermal	250	Haryana	Yes	Enable	Not Applicable	
DCRTPP (Yamuna Nagar)	Haryana	State	1	Thermal	300	Haryana	Yes	Enable	Not Applicable	
DCRTPP (Yamuna Nagar)	Haryana	State	2	Thermal	300	Haryana	Yes	Enable	Not Applicable	
Khedar (Rajiv Gandhi STPS)	Haryana	State	1	Thermal	600	Haryana	Yes	Enable	Not Applicable	
Khedar (Rajiv Gandhi STPS)	Haryana	State	2	Thermal	600	Haryana	Yes	Enable	Not Applicable	
Faridabad GPS	NTPC	State	GT#1	Gas	137.75	Haryana	Yes	Enable	Not Applicable	
Faridabad GPS	NTPC	State	GT#2	Gas	137.75	Haryana	Yes	Enable	Not Applicable	
Mahatama Gandhi STPS CLP Jhajjar	CLP	IPP	1	Thermal	660	Haryana	Yes	Enable	Not Applicable	
Mahatama Gandhi STPS CLP Jhajjar	CLP	IPP	2	Thermal	660	Haryana	Yes	Enable	Not Applicable	
Baspa	Baspa	IPP	1	Hydro	100	Himachal Pradesh	Yes	Disable	Disable	RGMO/FGMO Status Disabled, Power Houses is being regulated by **"ALDC"** based upon Grid Situation.
Baspa	Baspa	IPP	2	Hydro	100	Himachal Pradesh	Yes	Disable	Disable	RGMO/FGMO Status Disabled, Power Houses is being regulated by **"ALDC"** based upon Grid Situation.
Baspa	Baspa	IPP	3	Hydro	100	Himachal Pradesh	Yes	Disable	Disable	RGMO/FGMO Status Disabled, Power Houses is being regulated by **"ALDC"** based upon Grid Situation.
Malana-I	Malana	IPP	1	Hydro	43	Himachal Pradesh	No	Disable	Disable	FGMO/RGMO not applicable, as Malana run under Cascaded mode with Malana Stage-2
Malana-I	Malana	IPP	2	Hydro	43	Himachal Pradesh	No	Disable	Disable	FGMO/RGMO not applicable, as Malana run under Cascaded mode with Malana Stage-2
Malana-II	Malana-II	IPP	1	Hydro	50	Himachal Pradesh	Yes	Disable	Enable	
Malana-II	Malana-II	IPP	2	Hydro	50	Himachal Pradesh	Yes	Disable	Enable	
Baglihar-1	J&K	State	1	Hydro	150	Jammu & Kashmir	Yes	Disable	Disable	
Baglihar-1	J&K	State	2	Hydro	150	Jammu & Kashmir	Yes	Disable	Disable	
Baglihar-1	J&K	State	3	Hydro	150	Jammu & Kashmir	Yes	Disable	Disable	
Baglihar-2	J&K	State	1	Hydro	150	Jammu & Kashmir	Yes	Disable	Disable	

Baglihar-2	J&K	State	2	Hydro	150	Jammu & Kashmir	Yes	Disable	Disable	
Baglihar-2	J&K	State	3	Hydro	150	Jammu & Kashmir	Yes	Disable	Disable	
Guru Gobind Singh TPS (Ropar)	Punjab	State	3	Thermal	210	Punjab	Yes	Enable	Enable	
Guru Gobind Singh TPS (Ropar)	Punjab	State	4	Thermal	210	Punjab	Yes	Enable	Enable	
Guru Gobind Singh TPS (Ropar)	Punjab	State	5	Thermal	210	Punjab	Yes	Enable	Enable	
Guru Gobind Singh TPS (Ropar)	Punjab	State	6	Thermal	210	Punjab	Yes	Enable	Enable	
Lehra Mohabbat TPS	Punjab	State	1	Thermal	210	Punjab	Yes	Enable	Not Applicable	Work order for PFR testing has already been placed and the same is likely to be carried out during July-August 2022.
Lehra Mohabbat TPS	Punjab	State	2	Thermal	210	Punjab	Yes	Enable	Not Applicable	Work order for PFR testing has already been placed and the same is likely to be carried out during July-August 2022.
Lehra Mohabbat TPS	Punjab	State	3	Thermal	250	Punjab	Yes	Enable	Not Applicable	Work order for PFR testing has already been placed and the same is likely to be carried out during July-August 2022.
Lehra Mohabbat TPS	Punjab	State	4	Thermal	250	Punjab	Yes	Enable	Not Applicable	Work order for PFR testing has already been placed and the same is likely to be carried out during July-August 2022.
Goindwal TPS	GVK	IPP	1	Thermal	270	Punjab	Yes	Enable	Not Applicable	
Goindwal TPS	GVK	IPP	2	Thermal	270	Punjab	Yes	Enable	Not Applicable	
Ranjit Sagar (Thein Dam)	Punjab	State	1	Hydro	150	Punjab	Yes	Disable	Enable	New RGMO based EHGC has been commissioned and work of rectification in RGMO logic is under progress by BHEL
Ranjit Sagar (Thein Dam)	Punjab	State	2	Hydro	150	Punjab	No	Disable	Enable	OLD FGMO based EHG is yet to be replaced with new RGMO based EHGC.
Ranjit Sagar (Thein Dam)	Punjab	State	3	Hydro	150	Punjab	Yes	Enable	Disable	New RGMO based EHGC has been commissioned and BHEL has uploaded RGMO logic which is under observation.
Ranjit Sagar (Thein Dam)	Punjab	State	4	Hydro	150	Punjab	Yes	Disable	Enable	New RGMO based EHGC has been commissioned and work of rectification in RGMO logic is under progress by BHEL
Talwandi Saboo TPS	Punjab	State	1	Thermal	660	Punjab	Yes	Enable	Not Applicable	
Talwandi Saboo TPS	Punjab	State	2	Thermal	660	Punjab	Yes	Enable	Not Applicable	
Talwandi Saboo TPS	Punjab	State	3	Thermal	660	Punjab	Yes	Enable	Not Applicable	
Rajpura TPS	NPL	IPP	1	Thermal	700	Punjab	Yes	Enable	Not Applicable	
Rajpura TPS	NPL	IPP	2	Thermal	700	Punjab	Yes	Enable	Not Applicable	
Chhabra Stage-I	Rajasthan	State	1	Thermal	250	Rajasthan	Yes	Enable	Not Applicable	
Chhabra Stage-I	Rajasthan	State	2	Thermal	250	Rajasthan	Yes	Enable	Not Applicable	
Chhabra Stage-2	Rajasthan	State	3	Thermal	250	Rajasthan	Yes	Enable	Not Applicable	
Chhabra Stage-2	Rajasthan	State	4	Thermal	250	Rajasthan	Yes	Enable	Not Applicable	
Chhabra Supercritical	Rajasthan	State	1	Thermal	660	Rajasthan	Yes	Enable	Not Applicable	
Chhabra Supercritical	Rajasthan	State	2	Thermal	660	Rajasthan	Yes	Enable	Not Applicable	
Kota TPS	Rajasthan	State	3	Thermal	210	Rajasthan	Yes	Enable	Disable	
Kota TPS	Rajasthan	State	4	Thermal	210	Rajasthan	Yes	Enable	Disable	
Kota TPS	Rajasthan	State	5	Thermal	210	Rajasthan	Yes	Disable	Disable	Due to ID fan overloading
Kalisindh	Rajasthan	State	1	Thermal	600	Rajasthan	Yes	Enable	Not Applicable	
Kalisindh	Rajasthan	State	2	Thermal	600	Rajasthan	Yes	Enable	Not Applicable	
Kawai	Adani	IPP	1	Thermal	660	Rajasthan	Yes	Enable	Not Applicable	
Kawai	Adani	IPP	2	Thermal	660	Rajasthan	Yes	Enable	Not Applicable	
Suratgarh TPS	Rajasthan	State	2	Thermal	250	Rajasthan	Yes	Disable	Not Applicable	RGMO implemented & tested in U#2 after station C&I R&M in 2020. Currently due to low vacuum, unit is not running on full load . It shall be put in service as soon as above problem is rectified.
Suratgarh TPS	Rajasthan	State	3	Thermal	250	Rajasthan	Yes	Enable	Not Applicable	RGMO working as per logic.
Suratgarh TPS	Rajasthan	State	4	Thermal	250	Rajasthan	Yes	Enable	Not Applicable	RGMO working as per logic.
Suratgarh TPS	Rajasthan	State	5	Thermal	250	Rajasthan	Yes	Enable	Not Applicable	RGMO working as per logic.
Suratgarh TPS	Rajasthan	State	6	Thermal	250	Rajasthan	Yes	Disable	Not Applicable	RGMO has always been working fine in U#6. As of now Unit is running on Hydraulic mode w.e.f. 13.05.2022 due to Turbine Mtc problem. Hence RGMO is out. It shall be put in service again as soon as Turbine problem is resolved.
Suratgarh Supercritical	Rajasthan	State	1	Thermal	660	Rajasthan	Yes	Enable	Not Applicable	
Suratgarh Supercritical	Rajasthan	State	2	Thermal	660	Rajasthan	Yes	Enable	Not Applicable	

Anpara - B	UP	State	1	Thermal	500	Uttar Pradesh	Yes	Enable	Not Applicable	RGMO response is slow due to old C&I system. Upgradation is required for which OEM M/s Toshiba is being pursued. Placement of work order for PFR test is under process.
Anpara - B	UP	State	2	Thermal	500	Uttar Pradesh	Yes	Enable	Not Applicable	Placement of work order for PFR test is under process.
Anpara-D	UP	State	1	Thermal	500	Uttar Pradesh	Yes	Enable	Not Applicable	Work order for PFR test has been placed to M/s Solvina
Anpara-D	UP	State	2	Thermal	500	Uttar Pradesh	Yes	Enable	Not Applicable	
Anpara-C	Lanco	IPP	1	Thermal	600	Uttar Pradesh	Yes	Enable	Not Applicable	About to place PO to M/s Solvina for PFR Testing
Anpara-C	Lanco	IPP	2	Thermal	600	Uttar Pradesh	Yes	Enable	Not Applicable	About to place PO to M/s Solvina for PFR Testing
Bara	Prayagraj	IPP	1	Thermal	660	Uttar Pradesh	Yes	Enable	Not Applicable	
Bara	Prayagraj	IPP	2	Thermal	660	Uttar Pradesh	Yes	Enable	Not Applicable	
Bara	Prayagraj	IPP	3	Thermal	660	Uttar Pradesh	Yes	Enable	Not Applicable	
Harduaganj-Ext	UP	State	8	Thermal	250	Uttar Pradesh	Yes	Enable	Not Applicable	The PFR test on U-08 could be done at 100% load as lower load schedules were not provided by UPSLDC due to high demand.
Harduaganj-Ext	UP	State	9	Thermal	250	Uttar Pradesh	Yes	Enable	Not Applicable	Work order for PFR test has been placed to M/s Solvina on 29.10.21. Testing shall be done during lean demand period in consultation with UPSLDC.
Harduaganj-Ext	UP	State	10	Thermal	660	Uttar Pradesh	Yes	Disable	Not Applicable	COD of this unit is 09.02.2022. currently fine tuning of CMC mode operation is under process & then RGMO shall be enabled ASAP.
Lalitpur TPS	Lalitpur	IPP	1	Thermal	660	Uttar Pradesh	Yes	Enable	Not Applicable	
Lalitpur TPS	Lalitpur	IPP	2	Thermal	660	Uttar Pradesh	Yes	Enable	Not Applicable	
Lalitpur TPS	Lalitpur	IPP	3	Thermal	660	Uttar Pradesh	Yes	Enable	Not Applicable	
Meja TPS	NTPC	Central	2	Thermal	660	Uttar Pradesh	Yes	Enable	Not Applicable	
Paricha	UP	State	3	Thermal	210	Uttar Pradesh	Yes	Enable	Not Applicable	Work order for PFR test has been placed to M/s Solvina on 06.05.22. Testing shall be done during lean demand period in consultation with UPSLDC.
Paricha	UP	State	4	Thermal	210	Uttar Pradesh	Yes	Enable	Not Applicable	Work order for PFR test has been placed to M/s Solvina on 06.05.22. Testing shall be done during lean demand period in consultation with UPSLDC.
Paricha	UP	State	5	Thermal	250	Uttar Pradesh	Yes	Enable	Not Applicable	Work order for PFR test has been placed to M/s Solvina on 06.05.22. Testing shall be done during lean demand period in consultation with UPSLDC.
Paricha	UP	State	6	Thermal	250	Uttar Pradesh	Yes	Enable	Not Applicable	Work order for PFR test has been placed to M/s Solvina on 06.05.22. Testing shall be done during lean demand period in consultation with UPSLDC.
Rosa-I	Rosa	IPP	1	Thermal	300	Uttar Pradesh	Yes	Enable	Not Applicable	
Rosa-I	Rosa	IPP	2	Thermal	300	Uttar Pradesh	Yes	Enable	Not Applicable	
Rosa-II	Rosa	IPP	1	Thermal	300	Uttar Pradesh	Yes	Enable	Not Applicable	
Rosa-II	Rosa	IPP	2	Thermal	300	Uttar Pradesh	Yes	Enable	Not Applicable	
Srinagar(Alaknanda)	AHPCL	IPP	1	Hydro	82.5	Uttarakhand	Yes	Enable	Not Applicable	
Srinagar(Alaknanda)	AHPCL	IPP	2	Hydro	82.5	Uttarakhand	Yes	Enable	Not Applicable	
Srinagar(Alaknanda)	AHPCL	IPP	3	Hydro	82.5	Uttarakhand	Yes	Enable	Not Applicable	
Srinagar(Alaknanda)	AHPCL	IPP	4	Hydro	82.5	Uttarakhand	Yes	Enable	Not Applicable	
Chibro (Yamuna) HPS	Uttarakhand	State	1	Hydro	60	Uttarakhand	Yes	Disable	Not Applicable	
Chibro (Yamuna) HPS	Uttarakhand	State	2	Hydro	60	Uttarakhand	Yes	Disable	Not Applicable	
Chibro (Yamuna) HPS	Uttarakhand	State	3	Hydro	60	Uttarakhand	Yes	Disable	Not Applicable	
Chibro (Yamuna) HPS	Uttarakhand	State	4	Hydro	60	Uttarakhand	Yes	Disable	Not Applicable	
Maneri Bhali-II HPS	Uttarakhand	State	1	Hydro	76	Uttarakhand	No	Not Available	Enable	Initally provision was made for RGMO but at present the system is working in manual mode
Maneri Bhali-II HPS	Uttarakhand	State	2	Hydro	76	Uttarakhand	No	Not Available	Enable	Initally provision was made for RGMO but at present the system is working in manual mode
Maneri Bhali-II HPS	Uttarakhand	State	3	Hydro	76	Uttarakhand	No	Not Available	Enable	Initally provision was made for RGMO but at present the system is working in manual mode
Maneri Bhali-II HPS	Uttarakhand	State	4	Hydro	76	Uttarakhand	No	Not Available	Enable	Initally provision was made for RGMO but at present the system is working in manual mode
Tanakpur HPS	NHPC	Central	1	Hydro	40	Uttarakhand	Not Applicable		Enable	NHPC intimated that station is RoR and RGMO is not applicable as per IEGC.

Tanakpur HPS	NHPC	Central	2	Hydro	40	Himachal Pradesh	Not Applicable		Enable	NHPC intimated that station is RoR and RGMO is not applicable as per IEGC.
Tanakpur HPS	NHPC	Central	3	Hydro	40	Himachal Pradesh	Not Applicable		Enable	NHPC intimated that station is RoR and RGMO is not applicable as per IEGC.
Uri-I	NHPC	Central	1	Hydro	120	Jammu & Kashmir	Not Applicable		Enable	NHPC intimated that station is RoR and RGMO is not applicable as per IEGC.
Uri-I	NHPC	Central	2	Hydro	120	Jammu & Kashmir	Not Applicable		Enable	NHPC intimated that station is RoR and RGMO is not applicable as per IEGC.
Uri-I	NHPC	Central	3	Hydro	120	Jammu & Kashmir	Not Applicable		Enable	NHPC intimated that station is RoR and RGMO is not applicable as per IEGC.
Uri-I	NHPC	Central	4	Hydro	120	Jammu & Kashmir	Not Applicable		Enable	NHPC intimated that station is RoR and RGMO is not applicable as per IEGC.
Uri-II	NHPC	Central	1	Hydro	60	Jammu & Kashmir	Not Applicable		Enable	NHPC intimated that station is RoR and RGMO is not applicable as per IEGC.
Uri-II	NHPC	Central	2	Hydro	60	Jammu & Kashmir	Not Applicable		Enable	NHPC intimated that station is RoR and RGMO is not applicable as per IEGC.
Uri-II	NHPC	Central	3	Hydro	60	Jammu & Kashmir	Not Applicable		Enable	NHPC intimated that station is RoR and RGMO is not applicable as per IEGC.
Uri-II	NHPC	Central	4	Hydro	60	Jammu & Kashmir	Not Applicable		Enable	NHPC intimated that station is RoR and RGMO is not applicable as per IEGC.
Rampur HEP	SJVNL	Central	1	Hydro	68.67	Himachal Pradesh	Yes	Enable	Enable	
Rampur HEP	SJVNL	Central	2	Hydro	68.67	Himachal Pradesh	Yes	Enable	Enable	
Rampur HEP	SJVNL	Central	3	Hydro	68.67	Himachal Pradesh	Yes	Enable	Enable	
Rampur HEP	SJVNL	Central	4	Hydro	68.67	Himachal Pradesh	Yes	Enable	Enable	
Rampur HEP	SJVNL	Central	5	Hydro	68.67	Himachal Pradesh	Yes	Enable	Enable	
Rampur HEP	SJVNL	Central	6	Hydro	68.67	Himachal Pradesh	Yes	Enable	Enable	
Sorang	Sorang	IPP	1	Hydro	50	Himachal Pradesh	Not Applicable		Enable	Station is RoR and RGMO is not applicable as per IEGC.
Sorang	Sorang	IPP	2	Hydro	50	Himachal Pradesh	Not Applicable		Enable	Station is RoR and RGMO is not applicable as per IEGC.
Bajoli Holi	Bajoli Holi	IPP	1	Hydro	60	Himachal Pradesh	Yes	Enable	Enable	
Bajoli Holi	Bajoli Holi	IPP	2	Hydro	60	Himachal Pradesh	Yes	Enable	Enable	
Bajoli Holi	Bajoli Holi	IPP	3	Hydro	60	Himachal Pradesh	Yes	Enable	Enable	
Chutak HPS	NHPC	State	1	Hydro	11	Ladakh	Not Applicable		Enable	As reported, RGMO is not applicable as per IEGC clause 5.2 (f), 5.2 (g), 5.2 (h) and ,5.2(i)
Chutak HPS	NHPC	State	2	Hydro	11	Ladakh	Not Applicable		Enable	As reported, RGMO is not applicable as per IEGC clause 5.2 (f), 5.2 (g), 5.2 (h) and ,5.2(i)
Chutak HPS	NHPC	State	3	Hydro	11	Ladakh	Not Applicable		Enable	As reported, RGMO is not applicable as per IEGC clause 5.2 (f), 5.2 (g), 5.2 (h) and ,5.2(i)
Chutak HPS	NHPC	State	4	Hydro	11	Ladakh	Not Applicable		Enable	As reported, RGMO is not applicable as per IEGC clause 5.2 (f), 5.2 (g), 5.2 (h) and ,5.2(i)
Nimmo Bazgo HPS	NHPC	State	1	Hydro	15	Ladakh	Not Applicable		Enable	As reported , RGMO is not applicable as per IEGC clause 5.2 (f), 5.2 (g), 5.2 (h) and ,5.2(i)
Nimmo Bazgo HPS	NHPC	State	2	Hydro	15	Ladakh	Not Applicable		Enable	As reported , RGMO is not applicable as per IEGC clause 5.2 (f), 5.2 (g), 5.2 (h) and ,5.2(i)
Nimmo Bazgo HPS	NHPC	State	3	Hydro	15	Ladakh	Not Applicable		Enable	As reported , RGMO is not applicable as per IEGC clause 5.2 (f), 5.2 (g), 5.2 (h) and ,5.2(i)
Upper Bari Doab Canal (UBDC) Hydroelectric Project	Punjab	State	1	Hydro	15	Punjab	Not Applicable		Enable	As reported , RGMO is not applicable as per IEGC clause 5.2 (f), 5.2 (g), 5.2 (h) and ,5.2(i)
Upper Bari Doab Canal (UBDC) Hydroelectric Project	Punjab	State	2	Hydro	15	Punjab	Not Applicable		Enable	As reported , RGMO is not applicable as per IEGC clause 5.2 (f), 5.2 (g), 5.2 (h) and ,5.2(i)
Upper Bari Doab Canal (UBDC) Hydroelectric Project	Punjab	State	3	Hydro	15	Punjab	Not Applicable		Enable	As reported , RGMO is not applicable as per IEGC clause 5.2 (f), 5.2 (g), 5.2 (h) and ,5.2(i)
Upper Bari Doab Canal (UBDC) Hydroelectric Project	Punjab	State	4	Hydro	15.5	Punjab	Not Applicable		Enable	As reported , RGMO is not applicable as per IEGC clause 5.2 (f), 5.2 (g), 5.2 (h) and ,5.2(i)
Upper Bari Doab Canal (UBDC) Hydroelectric Project	Punjab	State	5	Hydro	15.5	Punjab	Not Applicable		Enable	As reported , RGMO is not applicable as per IEGC clause 5.2 (f), 5.2 (g), 5.2 (h) and ,5.2(i)
Upper Bari Doab Canal (UBDC) Hydroelectric Project	Punjab	State	6	Hydro	15.5	Punjab	Not Applicable		Enable	As reported , RGMO is not applicable as per IEGC clause 5.2 (f), 5.2 (g), 5.2 (h) and ,5.2(i)
Barsingsar	NLC	State	1	Lignite	125	Rajasthan	Not Applicable		Disable	As reported , RGMO is not applicable as per IEGC clause 5.2 (f), 5.2 (g), 5.2 (h) and ,5.2(i)
Barsingsar	NLC	State	2	Lignite	125	Rajasthan	Not Applicable		Disable	As reported , RGMO is not applicable as per IEGC clause 5.2 (f), 5.2 (g), 5.2 (h) and ,5.2(i)
Kota TPS	Rajastahn	State	1	Thermal	110	Rajasthan	Not Applicable		Disable	As reported , RGMO is not applicable as per IEGC clause 5.2 (f), 5.2 (g), 5.2 (h) and ,5.2(i)
Kota TPS	Rajastahn	State	2	Thermal	110	Rajasthan	Not Applicable		Disable	As reported , RGMO is not applicable as per IEGC clause 5.2 (f), 5.2 (g), 5.2 (h) and ,5.2(i)

Rajwest	JSW	IPP	1	Lignite	135	Rajasthan	Not Applicable		Disable	RGMO is applicable for Thermal generating units of 200 MW and above, as per grid code.
Rajwest	JSW	IPP	2	Lignite	135	Rajasthan	Not Applicable		Disable	RGMO is applicable for Thermal generating units of 200 MW and above ,as per grid code.
Rajwest	JSW	IPP	3	Lignite	135	Rajasthan	Not Applicable		Disable	RGMO is applicable for Thermal generating units of 200 MW and above ,as per grid code.
Rajwest	JSW	IPP	4	Lignite	135	Rajasthan	Not Applicable		Disable	RGMO is applicable for Thermal generating units of 200 MW and above ,as per grid code.
Rajwest	JSW	IPP	5	Lignite	135	Rajasthan	Not Applicable		Disable	RGMO is applicable for Thermal generating units of 200 MW and above ,as per grid code.
Rajwest	JSW	IPP	6	Lignite	135	Rajasthan	Not Applicable		Disable	RGMO is applicable for Thermal generating units of 200 MW and above ,as per grid code.
Rajwest	JSW	IPP	7	Lignite	135	Rajasthan	Not Applicable		Disable	RGMO is applicable for Thermal generating units of 200 MW and above ,as per grid code.
Rajwest	JSW	IPP	8	Lignite	135	Rajasthan	Not Applicable		Disable	RGMO is applicable for Thermal generating units of 200 MW and above ,as per grid code.
VSLPP	KSK	IPP	1	Lignite	135	Rajasthan	Not Applicable		Disable	RGMO is applicable for Thermal generating units of 200 MW and above ,as per grid code.
Kota TPS	Rajastahn	State	6	Thermal	195	Rajasthan	Not Applicable		Disable	As per IEGC, RGMO is applicable for Thermal generating units of 200 MW and above
Kota TPS	Rajastahn	State	7	Thermal	195	Rajasthan	Not Applicable		Disable	As per IEGC, RGMO is applicable for Thermal generating units of 200 MW and above
Bajaj Energy Pvt Limited	Bajaj	IPP	1	Thermal	45	Uttar Pradesh	Not Applicable		Enable	As reported , RGMO is not applicable as per IEGC clause 5.2 (f), 5.2 (g), 5.2 (h) and ,5.2(i). FGMO is operated in manual mode.
Bajaj Energy Pvt Limited	Bajaj	IPP	2	Thermal	45	Uttar Pradesh	Not Applicable		Enable	As reported , RGMO is not applicable as per IEGC clause 5.2 (f), 5.2 (g), 5.2 (h) and ,5.2(i). FGMO is operated in manual mode.
Bajaj Energy Pvt Limited	Bajaj	IPP	3	Thermal	45	Uttar Pradesh	Not Applicable		Enable	As reported , RGMO is not applicable as per IEGC clause 5.2 (f), 5.2 (g), 5.2 (h) and ,5.2(i). FGMO is operated in manual mode.
Bajaj Energy Pvt Limited	Bajaj	IPP	4	Thermal	45	Uttar Pradesh	Not Applicable		Enable	As reported , RGMO is not applicable as per IEGC clause 5.2 (f), 5.2 (g), 5.2 (h) and ,5.2(i). FGMO is operated in manual mode.
Bajaj Energy Pvt Limited	Bajaj	IPP	5	Thermal	45	Uttar Pradesh	Not Applicable		Enable	As reported , RGMO is not applicable as per IEGC clause 5.2 (f), 5.2 (g), 5.2 (h) and ,5.2(i). FGMO is operated in manual mode.
Bajaj Energy Pvt Limited	Bajaj	IPP	6	Thermal	45	Uttar Pradesh	Not Applicable		Enable	As reported , RGMO is not applicable as per IEGC clause 5.2 (f), 5.2 (g), 5.2 (h) and ,5.2(i). FGMO is operated in manual mode.
Bajaj Energy Pvt Limited	Bajaj	IPP	7	Thermal	45	Uttar Pradesh	Not Applicable		Enable	As reported , RGMO is not applicable as per IEGC clause 5.2 (f), 5.2 (g), 5.2 (h) and ,5.2(i). FGMO is operated in manual mode.
Bajaj Energy Pvt Limited	Bajaj	IPP	8	Thermal	45	Uttar Pradesh	Not Applicable		Enable	As reported , RGMO is not applicable as per IEGC clause 5.2 (f), 5.2 (g), 5.2 (h) and ,5.2(i). FGMO is operated in manual mode.
Bajaj Energy Pvt Limited	Bajaj	IPP	9	Thermal	45	Uttar Pradesh	Not Applicable		Enable	As reported , RGMO is not applicable as per IEGC clause 5.2 (f), 5.2 (g), 5.2 (h) and ,5.2(i). FGMO is operated in manual mode.
Bajaj Energy Pvt Limited	Bajaj	IPP	10	Thermal	45	Uttar Pradesh	Not Applicable		Enable	As reported , RGMO is not applicable as per IEGC clause 5.2 (f), 5.2 (g), 5.2 (h) and ,5.2(i). FGMO is operated in manual mode.
JP Churk	Jaypee	IPP	1	Thermal	60	Uttar Pradesh	Not Applicable		Enable	As reported , RGMO is not applicable as per IEGC clause 5.2 (f), 5.2 (g), 5.2 (h) and ,5.2(i)
JP Churk	Jaypee	IPP	2	Thermal	60	Uttar Pradesh	Not Applicable		Enable	As reported , RGMO is not applicable as per IEGC clause 5.2 (f), 5.2 (g), 5.2 (h) and ,5.2(i)
JP Churk	Jaypee	IPP	3	Thermal	60	Uttar Pradesh	Not Applicable		Enable	As reported , RGMO is not applicable as per IEGC clause 5.2 (f), 5.2 (g), 5.2 (h) and ,5.2(i)
Tanda TPS	NTPC	State	1	Thermal	110	Uttar Pradesh	Not Applicable		Enable	As reported , RGMO is not applicable as per IEGC clause 5.2 (f), 5.2 (g), 5.2 (h) and ,5.2(i). FGMO is operated in manual mode.
Tanda TPS	NTPC	State	2	Thermal	110	Uttar Pradesh	Not Applicable		Enable	As reported , RGMO is not applicable as per IEGC clause 5.2 (f), 5.2 (g), 5.2 (h) and ,5.2(i). FGMO is operated in manual mode.

Tanda TPS	NTPC	State	3	Thermal	110	Uttar Pradesh	Not Applicable		Enable	As reported , RGMO is not applicable as per IEGC clause 5.2 (f), 5.2 (g), 5.2 (h) and ,5.2(i). FGMO is operated in manual mode.
Tanda TPS	NTPC	State	4	Thermal	110	Uttar Pradesh	Not Applicable		Enable	As reported , RGMO is not applicable as per IEGC clause 5.2 (f), 5.2 (g), 5.2 (h) and ,5.2(i). FGMO is operated in manual mode.
Vishnu Prayag	Jaypee	IPP	1	Hydro	100	Uttarakhand	Not Applicable		Enable	As reported , RGMO is not applicable as per IEGC clause 5.2 (f), 5.2 (g), 5.2 (h) and ,5.2(i). FGMO is operated in manual mode.
Vishnu Prayag	Jaypee	IPP	2	Hydro	100	Uttarakhand	Not Applicable		Enable	As reported , RGMO is not applicable as per IEGC clause 5.2 (f), 5.2 (g), 5.2 (h) and ,5.2(i). FGMO is operated in manual mode.
Vishnu Prayag	Jaypee	IPP	3	Hydro	100	Uttarakhand	Not Applicable		Enable	As reported , RGMO is not applicable as per IEGC clause 5.2 (f), 5.2 (g), 5.2 (h) and ,5.2(i). FGMO is operated in manual mode.
Vishnu Prayag	Jaypee	IPP	4	Hydro	100	Uttarakhand	Not Applicable		Enable	As reported , RGMO is not applicable as per IEGC clause 5.2 (f), 5.2 (g), 5.2 (h) and ,5.2(i). FGMO is operated in manual mode.
Khodri HPS	Uttarakhand	State	1	Hydro	30	Uttarakhand	Not Applicable		Disable	As reported , RGMO is not applicable as per IEGC clause 5.2 (f), 5.2 (g), 5.2 (h) and ,5.2(i) - Run of the River (with pondage)
Khodri HPS	Uttarakhand	State	2	Hydro	30	Uttarakhand	Not Applicable		Disable	As reported , RGMO is not applicable as per IEGC clause 5.2 (f), 5.2 (g), 5.2 (h) and ,5.2(i) - Run of the River (with pondage)
Khodri HPS	Uttarakhand	State	3	Hydro	30	Uttarakhand	Not Applicable		Disable	As reported , RGMO is not applicable as per IEGC clause 5.2 (f), 5.2 (g), 5.2 (h) and ,5.2(i) - Run of the River (with pondage)
Khodri HPS	Uttarakhand	State	4	Hydro	30	Uttarakhand	Not Applicable		Disable	As reported , RGMO is not applicable as per IEGC clause 5.2 (f), 5.2 (g), 5.2 (h) and ,5.2(i) - Run of the River (with pondage)

Format for submission of status of RGMO and FGMO by NERPC

Sr. No.	Name of Generating Station	Sector (State/Centre/ Pvt)	Unit No. of Generating Station	Capacity (MW) of Unit No. of Generating Station	Status of RGMO		Enable/Disable status of FGMO
					Availability of RGMO (Yes/No)	Enable/Disable status of RGMO	
1	Ranganadi HEP	Central	Unit I	135	Yes	Enable	Enable
			Unit II	135	Yes	Enable	Enable
			Unit III	135	Yes	Enable	Enable
2	Pare HEP	Central	Unit I	55	Yes	Enable	Enable
			Unit II	55	Yes	Enable	Enable
3	Kameng HEP	Central	Unit I	150	Yes	Enable	Enable
			Unit II	150	Yes	Enable	Enable
			Unit III	150	Yes	Enable	Enable
			Unit IV	150	Yes	Enable	Enable
4	Kopili HEP	Central	Unit I	50	Under long Outage		
			Unit II	50			
			Unit III	50			
			Unit IV	50			
5	Kopili St II	Central	Unit I	25			
6	Khandong HEP	Central	Unit I	25			
			Unit II	25			
7	Doyang	Central	Unit I	25	Yes	Enable	Enable
			Unit II	25	Yes	Enable	Enable
			Unit III	25	Yes	Enable	Enable
8	Tuirial HEP	Central	Unit I	30	Yes	Enable	Enable
			Unit II	30	Yes	Enable	Enable
9	Loktak HEP	Central	Unit I	35	Yes	Enable	Enable
			Unit II	35	Yes	Enable	Enable
			Unit III	35	Yes	Enable	Enable
10	Palatana GBPP	Central	Unit I	363.3	Yes	Enable	Enable
			Unit II	363.3	Yes	Enable	Enable

11	BgTPP	Central	Unit I	250	Yes	Enable	Enable
			Unit II	250	Yes	Enable	Enable
			Unit III	250	Yes	Enable	Enable
12	Karbi Langpi HEP	State	Unit I	50	Yes	Enable	Disable
			Unit II	50	Yes	Enable	Disable
13	Umiam St II HEP	State	Unit I	10	Yes	Enable	Enable
			Unit II	10	Yes	Enable	Enable
14	Umiam St III HEP	State	Unit I	30	Yes	Enable	Enable
			Unit II	30	Yes	Enable	Enable
15	Umiam St IV HEP	State	Unit I	30	Yes	Enable	Enable
			Unit II	30	Yes	Enable	Enable
16	Leshka	State	Unit I	42	Yes	Enable	Enable
			Unit II	42	Yes	Enable	Enable
			Unit III	42	Yes	Enable	Enable

Name of Region : EASTERN REGION

Sl. No.	Details of stations/Units							Status of RGMO		Enable/Disable status of FGMO
	Name of State	Type	Name of Uitlity	Sector (CS/SS/PS)	Name of Station	Name of Stage/ Unit	Installed capacity (MW)	Availability of RGMO (Yes/No)	Enable/Disable status of RGMO	
1	JHARKHAND	Thermal	TVNL	SS	Tenughat	1	210	Yes	Enabled	Enabled
2				SS		2	210	No	FGMO with manual intervention	Enabled
3		Hydro	JSEB	SS	Subarnrekha	1	65	Status not available		Enabled
4				SS		2	65			Enabled
5	West Bengal	Thermal	WBPDCL	SS	Bandel TPS	4	60.0	NA	NA	Enabled
6				SS		5	215.0	Yes	Enabled	Enabled
7				SS	Santaldih	5	250	Yes	Enabled	Enabled
8				SS		6	250	Yes	Enabled	Enabled
9				SS	Kolaghat	3	210	No	No	No
10				SS		4	210	No	No	No
11				SS		5	210	No	No	No
12				SS		6	210	No	No	No
13				SS	Bakreshwar	1	210	Yes	Enabled	Enabled
14				SS		2	210	Yes	Enabled	Enabled
15				SS		3	210	Yes	Enabled	Enabled
16				SS		4	210	Yes	Enabled	Enabled
17				SS		5	210	Yes	Enabled	Enabled
18				SS	Sagardighi	1	300	Yes	Enabled	Enabled
19				SS		2	300	Yes	Enabled	Enabled
20				SS		3	500	Yes	Enabled	Enabled
21				SS		4	500	Yes	Enabled	Enabled
22		Hydro	WBSEDCL	SS	Raman Hydel	1	12.5	NA	NA	Enabled
23				SS		2	12.5	NA	NA	Enabled
24				SS		3	12.5	NA	NA	Enabled
25				SS		4	12.5	NA	NA	Enabled
26				SS	PPSP	1	225	No	No	Enabled
27				SS		2	225	No	No	Enabled
28				SS		3	225	No	No	Enabled
29				SS		4	225	No	No	Enabled
30				SS		1	250	Yes	Enabled	Enabled

31		Thermal	CESC	SS	Budge-Budge	2	250	Yes	Enabled	Enabled
32				SS		3	250	Yes	Enabled	Enabled
33				SS	Southern	1	67.50	NA	NA	Enabled
34				SS		2	67.50	NA	NA	Enabled
35				SS	Titagarh	1	60	NA	NA	Enabled
36				SS		2	60	NA	NA	Enabled
37				SS		3	60	NA	NA	Enabled
38				SS		4	60	NA	NA	Enabled
39				SS	Haldia	1	300	Yes	Enabled	Enabled
40				SS		2	300	Yes	Enabled	Enabled
41		Thermal	DPL	SS	DPL	7	250	Yes	Enabled	Enabled
42				SS		8	300	Yes	Enabled	Enabled
43	Orissa	Hydro	OPGC	SS	IB TPS-I	1	210	Yes	Enabled	Enabled
44				SS		2	210	Yes	Enabled	Enabled
45				SS	IB TPS-II	1	660	Yes	Enabled	Enabled
46				SS		2	660	Yes	Enabled	Enabled
47			OHPC	SS	Burla	1	49.5	No	No	Enabled
48				SS		2	49.5	No	No	Enabled
49				SS		3	32	No	No	Enabled
50				SS		4	32	No	No	Enabled
51				SS		5	43.65	No	No	Enabled
52				SS		6	43.65	No	No	Enabled
53				SS		7	43.65	No	No	Enabled
54				SS	Chiplima	1	24	NA	NA	Enabled
55				SS		2	24	NA	NA	Enabled
56				SS		3	24	NA	NA	Enabled
57				SS	Balimela	1	60	No	FGMO with manual	Enabled
58				SS		2	60	No	FGMO with manual	Enabled
59				SS		3	60	No	FGMO with manual	Enabled
60				SS		4	60	No	FGMO with manual	Enabled
61				SS		5	60	No	FGMO with manual	Enabled
62				SS		6	60	No	FGMO with manual	Enabled
63				SS		7	75	No	FGMO with manual	Enabled
64				SS		8	75	No	FGMO with manual	Enabled
65				SS		1	50	No	FGMO with manual	Enabled

66				SS	Rengali	2	50	No	FGMO with manual	Enabled
67				SS		3	50	No	FGMO with manual	Enabled
68				SS		4	50	No	FGMO with manual	Enabled
69				SS		5	50	No	FGMO with manual	Enabled
70				SS	Upper Kolab	1	80	No	FGMO with manual	Enabled
71				SS		2	80	No	FGMO with manual	Enabled
72				SS		3	80	No	FGMO with manual	Enabled
73				SS		4	80	No	FGMO with manual	Enabled
74				SS	Indravati	1	150	No	FGMO with manual	Enabled
75				SS		2	150	No	FGMO with manual	Enabled
76				SS		3	150	No	FGMO with manual	Enabled
77				SS		4	150	No	FGMO with manual	Enabled

78		Thermal	DVC	CS	Chandrapura	7	250	Yes	Enabled	Enabled
79				CS		8	250	Yes	Enabled	Enabled
80				CS	WARIA	4	210	Yes	Enabled	Enabled
81				CS	Mejia - A	1	210	Yes	Enabled	Enabled
82				CS		2	210	Yes	Enabled	Enabled
83				CS		3	210	Yes	Enabled	Enabled
84				CS		4	210	Yes	Enabled	Enabled
85				CS		5	250	Yes	Enabled	Enabled
86				CS		6	250	Yes	Enabled	Enabled
87				CS	Mejia - B	7	500	Yes	Enabled	Enabled
88				CS		8	500	Yes	Enabled	Enabled
89				CS	DSTPS	1	500	Yes	Enabled	Enabled
90				CS		2	500	Yes	Enabled	Enabled
91				CS	KODERMA	1	500	Yes	Enabled	Enabled
92				CS		2	500	Yes	Enabled	Enabled
93				CS	RAGHUNATHPUR TPS (U# 1&2)	1	600	Yes	Enabled	Enabled
94				CS		2	600	Yes	Enabled	Enabled
95				CS	BOKARO "A" TPS (U#1)	1	500	Yes	Enabled	Enabled
96		Hydro		CS	Maithon	1	20	NA	NA	Enabled
97				CS		2	20	NA	NA	Enabled
98				CS		3	23.2	NA	NA	Enabled
99				CS	Panchet	1	40	Status not available		Enabled

100				CS	Panchet	2	40	Status not available		Enabled
101		Thermal	NTPC	CS	Farakka STPP-I	1	200	Yes	Enabled	Enabled
102				CS		2	200	Yes	Enabled	Enabled
103				CS		3	200	Yes	Enabled	Enabled
104				CS	Farakka STPP-II	4	500	Yes	Enabled	Enabled
105				CS		5	500	Yes	Enabled	Enabled
106				CS	Farakka-III	6	500	Yes	Enabled	Enabled
107				CS	Kahalgoan STPP-I	1	210	Yes	Enabled	Enabled
108				CS		2	210	Yes	Enabled	Enabled
109				CS		3	210	Yes	Enabled	Enabled
110				CS		4	210	Yes	Enabled	Enabled
111				CS	Kahalgoan STPP-II	5	500	Yes	Enabled	Enabled
112	Central Sector			CS		6	500	Yes	Enabled	Enabled
113				CS		7	500	Yes	Enabled	Enabled
114				CS	Talcher STPP Stg-I	1	500	Yes	Enabled	Enabled
115				CS		2	500	Yes	Enabled	Enabled
116				CS	Barh St-I	1	660	Yes	Enabled	Enabled
117				CS	Barh St-II	4	660	Yes	Enabled	Enabled
118				CS		5	660	Yes	Enabled	Enabled
119				CS	KBUNL	1	195	NA	NA	Enabled
120				CS		2	195	NA	NA	Enabled
121				CS	BRBCL	1	250	Yes	Enabled	Enabled
122				CS		2	250	Yes	Enabled	Enabled
123				CS		3	250	Yes	Enabled	Enabled
124				CS	NPGCL	1	660	Yes	Enabled	Enabled
125				CS		2	660	Yes	Enabled	Enabled
126				CS		3	660	Yes	Enabled	Enabled
127				CS	Darlipali	1	800	Yes	Enabled	Enabled
128				CS		2	800	Yes	Enabled	Enabled
129				CS	Barauni TPS	6	110	NA	NA	Enabled
130				CS		7	110	NA	NA	Enabled
131				CS		8	250	Yes	Enabled	Enabled
132				CS		9	250	Yes	Enabled	Enabled
135				CS	Rangit	1	20	NA	NA	Enabled
136				CS		2	20	NA	NA	Enabled
137				CS		3	20	NA	NA	Enabled

138		Hydro	NHPC	CS	Teesta HEP	1	170	Yes	Enabled	Enabled
139				CS		2	170	Yes	Enabled	Enabled
140				CS		3	170	Yes	Enabled	Enabled
141				CS	TLDP-III	1	33	Status not available		Enabled
142				CS		2	33			Enabled
143				CS		3	33			Enabled
144				CS		4	33			Enabled
145				CS	TLDP-IV	1	40			Enabled
146				CS		2	40			Enabled
147				CS		3	40			Enabled
148				CS		4	40			Enabled

149	IPP	Thermal	IPP	PS	Maithon RB TPP	1	525	Yes	Enabled	Enabled
150				PS		2	525	Yes	Enabled	Enabled
151				PS	Sterlite	1	600	Yes	Enabled	Enabled
152				PS		2	600	Yes	Enabled	Enabled
153				PS		3	600	Yes	Enabled	Enabled
154				PS		4	600	Yes	Enabled	Enabled
155				PS	Adhunik Power	1	270	Yes	Enabled	Enabled
156				PS		2	270	Yes	Enabled	Enabled
157				PS	GMR	1	350	Yes	Enabled	Enabled
158				PS		2	350	Yes	Enabled	Enabled
159				PS	JITPL	1	600	Yes	Enabled	Enabled
160				PS		2	600	Yes	Enabled	Enabled
161				PS	Jojobera TPP	1	120	NA	NA	Enabled
162				PS		2	120	NA	NA	Enabled
163		Hydro	IPP	PS	JLHEP	1	48	No	No	Enabled
164				PS		2	48	No	No	Enabled
165				PS	Chujachen HEP	1	49.5	No	No	Enabled
166				PS		2	49.5	No	No	Enabled
167				PS	TUL	1	200	Yes	Enabled	Enabled
168				PS		2	200	Yes	Enabled	Enabled
169				PS		3	200	Yes	Enabled	Enabled
170				PS		4	200	Yes	Enabled	Enabled
171				PS		5	200	Yes	Enabled	Enabled
172				PS		6	200	Yes	Enabled	Enabled

173				PS	Dikchu	1	48	Yes	Enabled	Enabled
174				PS		2	48	Yes	Enabled	Enabled
175				PS	Tashiding	1	49	No	No	Enabled
176				PS		2	49	No	No	Enabled
177				PS	Rongnichu	1	56.5	No	No	Enabled
178				PS		2	56.5	No	No	Enabled